HOME AUTOMATION SYSTEM

Project report submitted in partial fulfillment for the Degree of B.Tech in Applied Electronics & Instrumentation Engineering under Maulana Abul Kalam Azad University of Technology

TITLE OF THE PROJECT

HOME AUTOMATION SYSTEM

By

Ranita Majumder (11705515034)
Hirak Chatterjee (11705515017)
Subhadip Mondal(11705515045)
Aritra Hanra (11705516001)

Under Supervision of
Mr. Avishek Paul

Assistant Professor, Dept. of AEIE

DEPARTMENT OF APPLIED ELECTRONICS & INSTRUMENTATION ENGINEERING,

RCC INSTITUTE OF INFORMATION TECHNOLOGY,
CANAL SOUTH ROAD, BELIAGHATA, KOLKATA – 700015,
MAY,2019.

ACKNOWLEDGEMENT

It is a great privilege for us to express our profound gratitude to our respected teacher Mr. Avishek Paul, Applied Electronics &Instrumentation Engineering, RCC Institute of Information Technology, for his constant guidance, valuable suggestions, supervision and inspiration throughout the course work without which it would have been difficult to complete the work within scheduled time.

We would like to express our gratitude towards Miss Nawirita Dey, Mr. Srijan Bhattacharya, Mr. Kalyan Biswas and Mr. Debabrata Bhattacharya for his kind co-operation and encouragement which helped us in completion of this project.

We are also indebted to Mr. Arijit Ghosh, Head of the Department, Applied Electronics & Instrumentation Engineering, RCC Institute of Information Technology for permitting us to pursue the project.

We would like to take this opportunity to thank all the respected teachers of this department for being a perennial source of inspiration and showing the right path at the time of necessity.

Ranita Majumder
(11705515034)

Hirak Chatterjee
(11705515017)

Subhadip Mondal
(11705515045)

Aritra Hanra
(11705516001)

RCC INSTITUTE OF INFORMATION TECHNOLOGY
CANAL SOUTH ROAD, BELIAGHATA, KOLKATA – 700 015
PHONE : 2323 2463 FAX : (033)2323 4668
E-mail : campus@rcciit.in Website : www.rcciit.org

CERTIFICATE OF APPROVAL

The project report titled "Home Automation System" prepared by **Ranita Majumder**,11705515034:,**Hirak Chatterjee**,11705515017:,**Subhadip Mondal** ,11705515045:, and **Aritra Hanra,**11705516001 is hereby approved and certified as a creditable study in technological subjects performed in a way sufficient for its acceptance for partial fulfilment of the degree for which it is submitted.

It is to be understood that by this approval, the undersigned do not, necessarily endorse or approve any statement made, opinion expressed or conclusion drawn therein, but approve the project only for the purpose for which it is submitted.

Mr. Avishek Paul
Project Supervisor
Applied Electronics & Instrumentation Engineering

Mr. Arijit Ghosh
Head of the Department
Applied Electronics & Instrumentation Engineering

Examiner

RCC INSTITUTE OF INFORMATION TECHNOLOGY
CANAL SOUTH ROAD, BELIAGHATA, KOLKATA – 700 015
PHONE : 2323 2463 FAX : (033)2323 4668
E-mail : campus@rcciit.in Website : www.rcciit.org

RECOMMENDATION

I hereby recommend that the project report titled "**Home automation system**" prepared by **Ranita Majumder**,11705515034:, **Hirak Chatterjee**,11705515017:, **Subhadip Mondal**, 11705505145:, and **Aritra Hanra**, 11705516001: be accepted in partial fulfillment of the requirement for the Degree of Bachelor of Technology in Applied Electronics & Instrumentation Engineering, RCC Institute of Information Technology.

Mr. Avishek Paul
Project Supervisor
Applied Electronics & Instrumentation Engineering

Mr.Arijit Ghosh
Head of the Department
Applied Electronics & Instrumentation Engineering

ABSTRACT

The automatic door opening system is designed to open and close the door automatically using PIR sensor. A human body emits heat in the form of infrared energy. A PIR sensor detects the motion by checking for the sudden changes in the surrounding infrared pattern. When a body approaches within the operating range of the sensor, it sends a logical command to open the door.

The PIR sensor upon detecting a human body sends signal to the microcontroller. A dc motor fitted to a door rotates on receiving signal from microcontroller for opening the gate. After a few second the motor rotates in the opposite direction which closes the door once again. If a person approaches the door, PIR sensor detects it and opens the door once again to avoid any accident.

This circuit is divided into three parts: sensor, controller and counter display. PIR sensor observes an interruption and thus provides the input to the microcontroller and thus the d.c motor rotates accordingly.

In future we hope to work upon it to provide a security lock in the door that may use password or fingerprints at home entrance for authorisation including privacy feature. Automatic controlling of electrical appliances can also be included with this system. The door automatically closes with a fixed time delay.

List of Figures

Figure 1: Block diagram for automatic door opening system using PIR sensor.

Figure 2: Flowchart for automatic door opening system using PIR sensor.

Figure 3: Circuit diagram for automatic door opening system using PIR sensor.

Figure 4: Block diagram for automatic door opening system using PIR sensor.

Figure 5: Microcontroller chip.

Figure 6: Showing a typical microcontroller device and its different subunits.

Figure 7: Simplified model of a memory unit.

Figure 8: Simplified central processing unit with three register.

Figure 9: Showing connection between memory and central unit using buses.

Figure 10: Simplified input-output unit communicating with external world.

Figure 11: Serial unit sending data through three line only.

Figure 12: Pin configuration of 8051 microcontroller.

Figure 13: RAM architecture of 8051 microcontroller.

Figure 14: Pin configuration of PIR sensor.

Figure 15: PIR sensor pins.

Figure 16: PIR sensor focal length.

Figure 17: PIR sensor.

Figure 18: Capacitor .

Figure 19: Symbol of capacitor.

Figure 20: Capacitor and battery connection.

Figure 21: Ceramic capacitor(22 pF).

Figure 22: Resistor.

Figure 23: Symbol of resistor.

Figure 24: Carbon film resistors.

Figure 25: 220ohm resistor.

Figure 26: L293d motor driver.

Figure 27: L293d motor driver circuit diagram.

Figure 28: Fleming left Hand rule for dc motor.

Figure 29: Dc motor.

Figure 30: Crystal Oscillator.

Figure 31: Circuit diagram of crystal oscillator.

Figure 32: Push button connection.

Figure 33: Push button.

Figure 34: Parts of LED.

Figure 35: Various symbols of a diode.

Figure 36: Types of diodes.

Figure 37: Symbol and internal structure of p-n diode.

Figure 38: Graph diagram of Linear graded diode and step graded diode.

Figure 39: Open circuited configuration.

Figure 40: Short circuited configuration.

Figure 41: Forward bias configuration.

Figure 42: Reverse bias configuration.

Figure 43: Characteristics of diode.

Figure 44: BC547 Pin diagram.

Figure 45: BC547 chip.

Figure 46: Hardware of Home Automation System.

Figure 47: Circuit done in vero board.

Figure 48: Creating new microvision project.

Figure 49: Selecting AT89c51 microcontroller.

Figure 50: Selecting C file.

Figure 51: C code.

Figure 52: Selecting source group.

Figure 53: Final step for creating hex file.

Figure 54: When power is not given in the circuit.

Figure 55: When power is on door closes.

Figure 56: Human body is detected by PIR sensor.

Figure 57: Delay time.

Figure 58: Door closes.

List Of Table

Table 1: PIR Sensor PIN Functions

Table 2: Function of L298N Motor Driver

Table 3: Truth table of common cathode

Table 4: Truth Table of common anode

CONTENTS

Chapter1: Introduction 1

1.1. Objective of the project
1.2. Automation
1.3. Need of Automation

Chapter2: Literature Review 2

2.1. Literature Review

2.2. Methodology…….. 5

Chapter3: Block diagram 6

3.1. Block diagram

3.2. Flow chart

Chapter4: Circuit Diagram 7

Chapter5: Block diagram description 8

5.1. Clockwise motor control

5.2. Anticlockwise motor control

Chapter6: Components 9

6.1. Circuit components

6.2. Description of components

6.2.1. AT89C51 Microcontroller

6.2.2. PIR Sensor……. 20

6.2.3. Capacitor…… 23

6.2.4. Resistor…….. 25

6.2.5. L293D motor driver……... 28

6.2.6. DC Motor……... 30

6.2.7. Crystal oscillator…… 31

6.2.8. Push button…… 33

6.2.9. LED……... 34

6.2.10 BC547 Transistor……. 44

Chapter7: Hardware Implementation 47

Chapter8: Software and Debugging 48

Creating Hex File Using Keil Microvision

Chapter9: Application 51

Chapter10: Advantage & Disadvantage 52

Chapter11: Result 53

Chapter12: Conclusion 56

Chapter13: Future Scope of Study 57

References 58

Appendix 59

Chapter 1

Introduction

1.1. Objective of the project

Home Automation System is a simple automated system, where the door automatically opens up on detecting a person and automatically closes after sometimes. The PIR sensor upon detecting a human body sends signal to the microcontroller. A dc motor fitted to a door rotates on receiving signal from microcontroller for opening the gate. After a few second the motor rotates in the opposite direction which closes the door once again. If a person approaches the door, PIR sensor detects it and opens the door once again to avoid any accident.

This circuit is divided into three parts: sensor, controller and counter display. PIR sensor observes an interruption and thus provides the input to the microcontroller and thus the d.c motor rotates accordingly.

In future we hope to work upon it to provide a security lock in the door that may use password or fingerprints at home entrance for authorisation including privacy feature. Automatic controlling of electrical appliances can also be included with this system.

1.2. Automation

Automation is the technology by which a process or procedure is performed with minimal human assistance. Automation or automatic control is use of various control systems for operating equipment such as machinery, processes in factories, boilers, stabilization of ships, aircraft and other application.

Automation covers applications ranging from a household thermostat controlling a boiler, to a large industrial control system with ten of thousands of input measurements and output control signals. In control complexity, it can range from simple on-off control to multi-variable high level algorithms.

Automation has been achieved by various means including mechanical, hydraulic, pneumatic, electrical, electronic devices and computers, usually in combination. Complicated systems, such as modern factories, airplanes and ships typically use all these combines techniques. The benefit of automation includes labour savings, savings in electricity costs, savings in material costs, and improvements to quality, accuracy and precision.

1.3. Need of automation

Earlier, we looked into the face of future when we talked about automated devices, which could do anything on instigation of a controller, but today it has become a reality.

a) An automated device can replace good amount of human working force, moreover humans are more prone to errors and in intensive conditions the probability of error increases whereas, an automated device can work with diligence, versatility and with almost zero error.

- Replacing human operators in tasks that involve hard physical or monotonous work.
- Replacing humans in tasks done in dangerous environments (i.e. fire, space, volcanoes, nuclear facilities, underwater, etc)
- Performing tasks that are beyond human capabilities of size, weight, speed, endurance, etc.
- Economy improvement. Automation may improve in economy of enterprises, society or most of humankind. For example, when an enterprise that has invested in automation technology recovers its investment, or when a state or country increases its income due to automation like Germany or Japan in the 20th Century.

b) This is why this project looks into construction and implementation of a system involving hardware to control a variety of electrical and electronics system

2.1. Literature Review

Review 1: This project is built on voice recognition and room automation. The system is designed to incorporate both these domains to come up with Voice Recognition Based Wireless Room Automation System and comprises of three independent stand-alone embedded systems which can be interfaced with each other through wired or wireless media. The embedded system comprises of a Voice recognition module, encoding and transmission module along with decoding and reception module. The voice recognition based room automation system uses HM2007L IC to identify the voice speech or commands of a specific user. The command recognized by the device is being checked and verified with that of the stored voice speech database from an individual in order to confirm the user identity. Once the identity is found, the corresponding data is being sent from the microcontroller to the encoder for specific encoding techniques to be applied. This encoded data is transferred to the modulator for generation of FSK signal in order to transmit it via an antenna to a remote or far away receiver. The FSK modulated signal is received by the receiving unit for demodulation and successive decoding purpose so as to obtain the desired voice command of the user. The decoded data obtained from the output of the decoder is again compared with the predefined set of data for further checking of valid transmission. If matching is established, the corresponding relay is either energized or de-energized through a relay driver for turning ON or OFF the desired electrical appliance in accordance with the voice command.

Review 2: This project aims in designing a automated security access system using micro controller. The project makes use of DTMF technology to enter the password which makes secure opening or closing of door. Here when the user enters the wrong password then the system automatically sends alerting SMS messages to the predefined authority number. The input and output port of the micro controller are interfaced with different input and output modules depending on the requirements. In this project DTMF decoder reader, Stepper motor, GSM modem, LCD display are interfaced to the Microcontroller. Whenever a call is made to the phone in the system, it will be answered automatically and password is entered through phone keypad. The DTMF decoder gets the password and feds as input to Microcontroller. The Microcontroller validates this password. If the password is valid it opens the door which is linked to the stepper motor interfaced to the Controller. The status of the door is displayed on the LCD display. Whenever there is any wrong entry of the password the system alerts automatically in the form of SMS messages to the respective authorities. The Microcontroller used in this project is programmed using Embedded ‘C’ language.

Review 3: In this application note, we will explain how to use Silego’s GreenPAK SLG46140V to open and close an automatic door. We used a passive infrared (PIR) HC SR 501 sensor to detect the presence of humans near the surroundings of a door using GreenPAK to control L298N motor drivers. The PIR sensor detects the presence of a person based on the

infrared levels emitted. The output of the PIR sensor is used as an analog input to the Green PAK, which processes the input and manages signal timing. When the PIR sensor outputs HIGH, the Green PAK will open the door via the L298N motor driver circuit. If the PIR outputs LOW for more than six seconds, the door is then closed.

For clockwise Motor Control, the PIR sensor senses an object in its range, it outputs HIGH on its OUT pin, which is connected to Pin10 of the Green PAK. When the voltage on Pin10 rises above 1v, DFF4 is clocked, which passes POR (power on reset) through to Pin4, which is connected to the clockwise motor that causes the door to open. The two-second rising edge delay on CNT1/DLY1 and the inverter 2-L0 create a one-shot pulse which resets DFF4 when 2 seconds have elapsed. For counter clockwise Motor Control a six-second falling edge delay on the ACMP output is created by CNT0/DLY0. When the output of that delay block falls, the Falling Edge Detector in the P DLY block clocks DFF5,which is connected to another two-second one-shot pulse circuit. 2-bit LUT2 is connected to Pin13, and is used to ensure that both motors are not attempting to operate in opposite directions at the same time. This LUT makes sure that the counter clockwise motor can only run when the clockwise motor is not attempting to run.

Review 4: It is microcontroller based automatic door control system with visitor counter and was designed to automatically open a door once somebody approaches the door without the need for any switch, button or handle. This system also has a module that serves as visitor counter and as such, counts the number of entries in and out of the building and the door is made to slide open once the sensor picks up a signal implying that somebody is approaching the door. The door stays open for few minutes while the microcontroller checks the condition of the sensor. If the sensor still senses the presence of somebody, the door stays open. Else, the door closes while waiting for the next time to open. The design is with multi-message display using seven segment displays. The hardware components are coordinated by the AT89S51 micro controller chip while the C programming language is used to program the chip.

Review 5 : Here two control units were used one for internal system and one for external system and these control unit based on ATMEL'sAT89S52 microcontroller. The given capture shows the pins and basic requirement of microcontroller to make it functional. Detailed description of the controller is two-level interrupt, a full duplex serial port, on-chip oscillator, and clock circuitry. In addition, the AT89S52 is designed with static logic for operation down to zero frequency and supports two software selectable power saving modes. The Idle Mode stops the CPU while allowing the RAM, timer/counters, serial port, and interrupt system to continue functioning. The Power down Mode saves the RAM contents but freezes the oscillator, disabling all other chip functions until the next interrupt or hardware reset.

2.2. Methodology

The home automation system project is used to open and close the door automatically using PIR sensor. A PIR sensor detects the motion by checking for the sudden changes in the surrounding infrared pattern. The PIR sensor upon detecting a human body sends signal to the microcontroller. The microcontroller then gives control signals to drive the motor in clockwise direction to open the door. After a few second the motor rotates in the opposite direction thereby closing the door once again. If a person approaches the door suddenly, PIR sensor detects it and opens the door once again to avoid any accident. This is the method used in our Home Automation System.

- The microcontroller unit continuously checks for the arrival of any person from outside by using the microcontroller based sensors located at door.
- Here PIR sensor is used for Automatic door opening system for detecting human body.

- Principle of Automatic Door Opening System.
- The principle of the project lies in the functioning of the PIR Sensor. A PIR or Passive Infra-red Sensor, as the name indicates, doesn't emit infrared rays but only detects them. All humans emit infrared radiations in the form of body heat. When a human body comes, there is a change in the surrounding infrared pattern which is detected by the sensor.
- Automatic door is an automated movable barrier installed in the entry of a room or building to restrict access, provide ease of opening a door or provide visual privacy.
- Specific program code is written using C program for both parts.
- Hex file is generated using Kiel micro vision software.
- Hex file is burnt in 8051 microcontroller using Rob soft Labs burner.

The microcontroller receives the signal from the sensors and this signal is operated under the control of software which is stored in ROM .When any human and object pass through the PIR sensor the obstruction is sensed by the microcontroller.

Block Diagram

3.1. Block Diagram

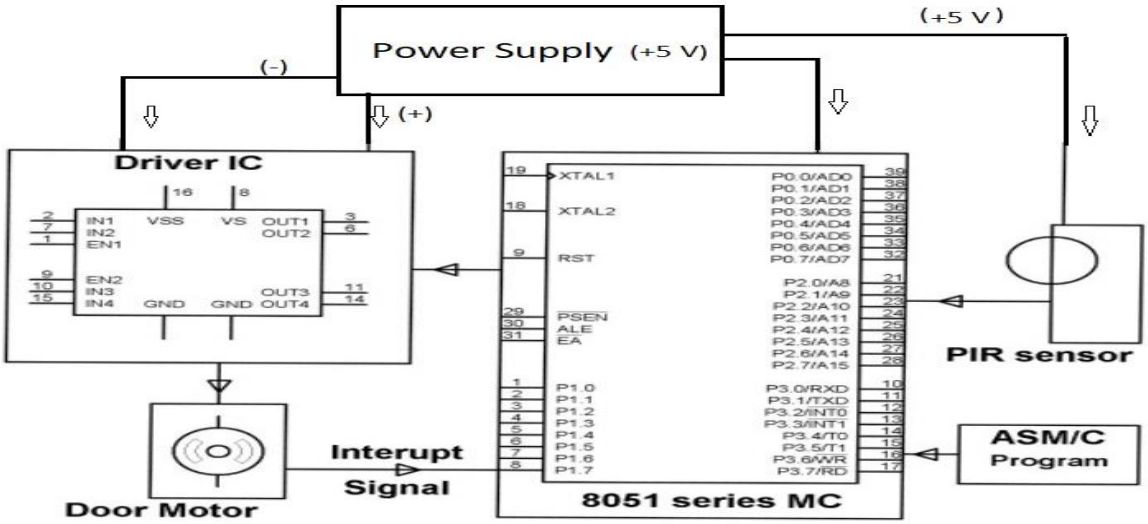

Figure 1: Block Diagram for Automatic Door Opening System Using PIR Sensor.

3.2. Flow Chart

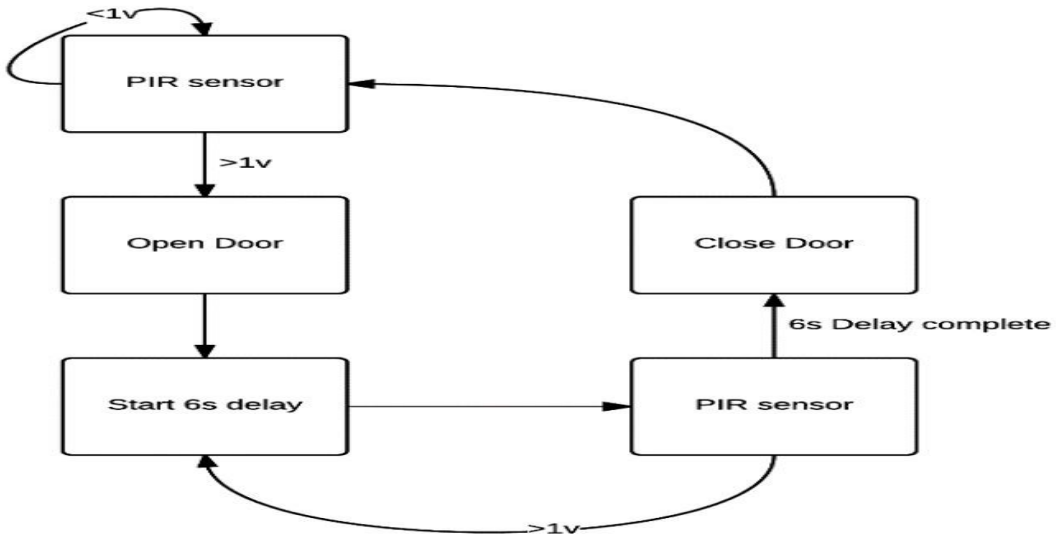

Figure 2: Flow Chart For Automatic Door Opening System Using PIR Sensor

Circuit Diagram

4.1. Circuit Diagram

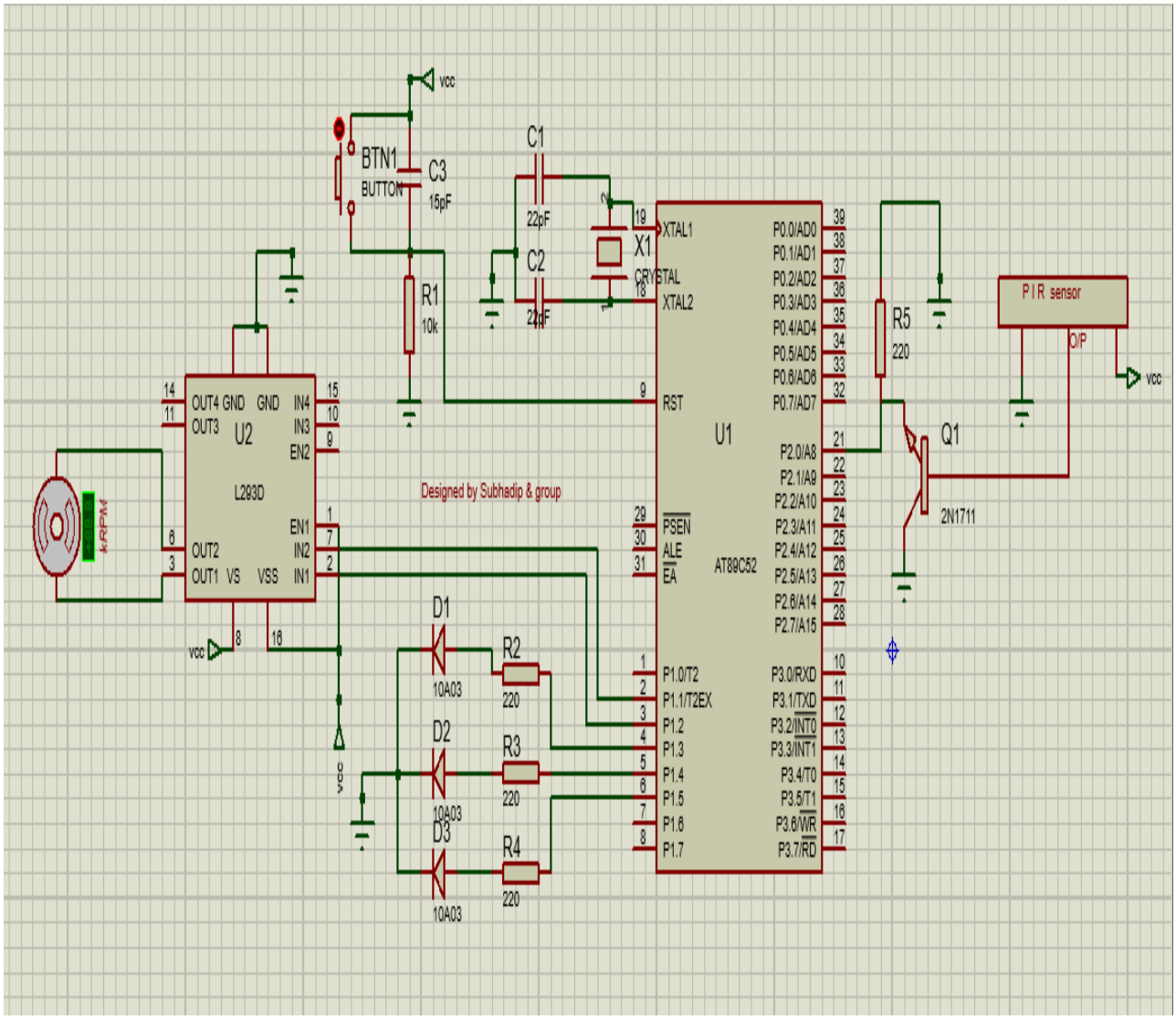

Figure 3: Circuit Diagram for Automatic Door Opening System using PIR sensor.

Block diagram description

5.1. Clockwise Motor Control

When the PIR sensor senses an object in its range, it outputs HIGH on its OUT pin, which is connected to Pin 21 of the microcontroller. When the voltage on Pin 21 rises above 1 V ,it gives a high signal to INPUT1 of motor driver IC through Pin 2 of microcontroller which is connected to the clockwise motor that causes the door to open.

5.2. Anticlockwise Motor Control

After a delay of 6s when the PIR sensor detects no object in its range, it generates a low voltage signal for which it makes Pin 3 high. Pin 3 of microcontroller provides a high signal to the INPUT2 of the motor driver IC which causes it to rotate in anticlockwise direction.

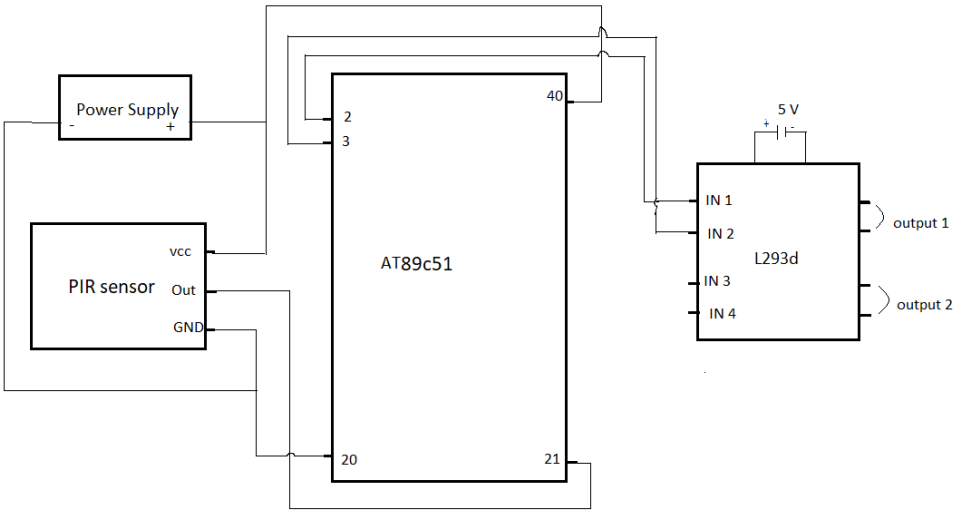

Figure 4: Block diagram of automatic door opening system using PIR system

Chapter 6

Components

6.1. Circuit Components

- ✓ Microcontroller(AT89C51)
- ✓ Capacitor
- ✓ Resistor
- ✓ Crystal Oscillator
- ✓ Push Button
- ✓ LED
- ✓ L293D Motor Driver
- ✓ PIR sensor
- ✓ D.C Motor

6.2. Description of Components

6.2.1. AT89C51 Microcontroller

The microprocessor is a programmable chip that forms the CPU of a computer. Nowadays, many microprocessor chips are available in the market for users to select from depending on the application .In general, processor chips can be classified as general-purpose microprocessors, microcontrollers and DSP processors.

Microcontrollers are processor chips that generally have memory, input ports and output ports within the chip itself. Therefore, they can also be called single chip computers, computer-on-a-chip or system on a chip.

AT89C51 is an 8-bit Microcontroller. ATMEL89C51 has 4KB of Flash programmable and erasable read only memory (PEROM) and 128 bytes of RAM. It can be erased and program to a maximum of 1000 times. It has four ports Programmable GPIO pins. The ATMEL89C51 is no longer in production and Atmel does not support new design. Instead the new ATMEL89S51 is recommended for new applications. But, since the ATMEL89C51 has a strong community support if your motive is to learn embedded then ATMEL89C51 can still be a good choice.

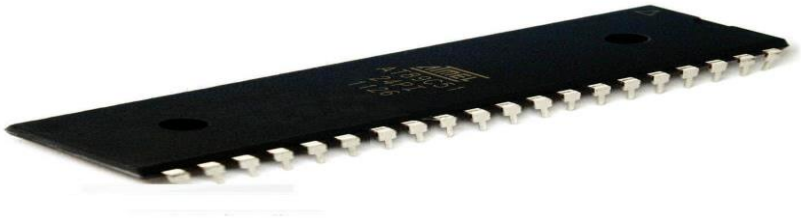

Figure 5: Microcontroller chip

✓ **The key features of microcontrollers include:**

- High Integration of Functionality
- Microcontrollers sometimes are called single-chip computers because they have on-chip memory and I/O circuitry and other circuitries that enable them to function as small standalone computers without other supporting circuitry.
- Field Programmability, Flexibility
- Microcontrollers often use EEPROM or EPROM as their storage device to allow field programmability so they are flexible to use. Once the program is tested to be correct then large quantities of microcontrollers can be programmed to be used in embedded systems.
- Easy to Use
- Assembly language is often used in microcontrollers and since they usually follow RISC architecture, the instruction set is small. The development package of microcontrollers often includes an assembler, a simulator, a programmer to "burn" the chip and a demonstration board. Some packages include a high level language compiler such as a C compiler and more sophisticated libraries.

✓ **Most microcontrollers will also combine other devices such as:**

- A Timer module to allow the microcontroller to perform tasks for certain time periods.
- A serial I/O port to allow data to flow between the microcontroller and other devices such as a PC or another microcontroller.
- An ADC to allow the microcontroller to accept analogue input data for processing.

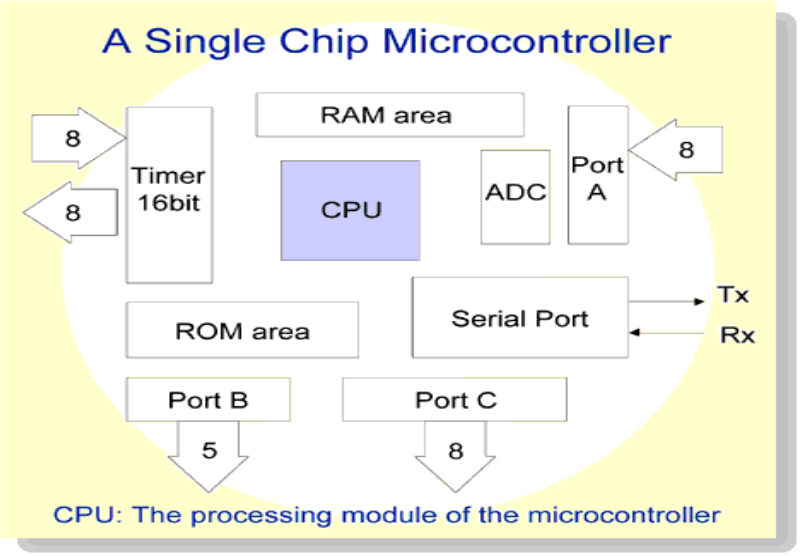

Figure 6: Architecture a typical microcontroller device

The heart of the microcontroller is the CPU core. In the past this has traditionally been based on an 8-bit microprocessor unit.

- ✓ **Microcontrollers versus Microprocessors:-**

Microcontroller differs from a microprocessor in many ways. First and the most important is its functionality. In order for a microprocessor to be used, other components such as memory, or components for receiving and sending data must be added to it. In short that means that microprocessor is the very heart of the computer. On the other hand, microcontroller is designed to be all of that in one. No other external components are needed for its application because all necessary peripherals are already built into it. Thus, we save the time and space needed to construct devices.

- ✓ **Memory unit: -**

Memory is part of the microcontroller whose function is to store data. The easiest way to explain it is to describe it as one big closet with lots of drawers. If we suppose that we marked the drawers in such a way that they cannot be confused, any of their contents will then be easily accessible. It is enough to know the designation of the drawer and so its contents will be known to us for sure.

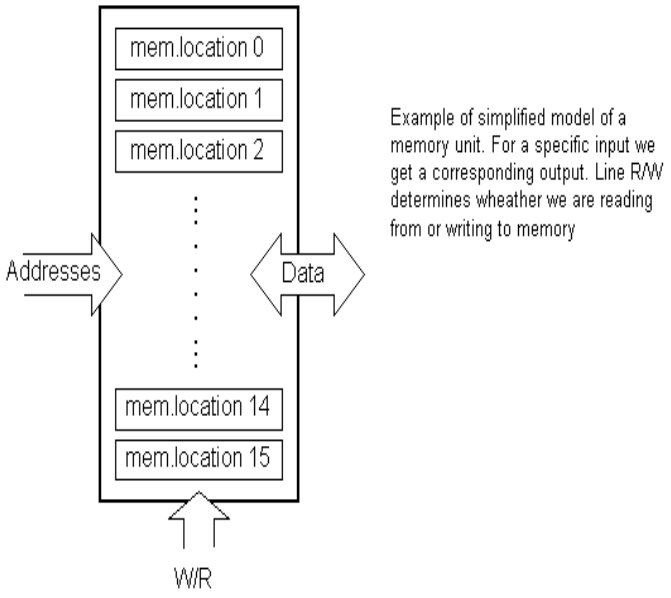

Figure 7: Simplified model of a memory unit

Memory components are exactly like that. For a certain input we get the contents of a certain addressed memory location and that's all. Two new concepts are brought to us: addressing and

memory location. Memory consists of all memory locations, and addressing is nothing but selecting one of them. This means that we need to select the desired memory location on one hand, and on the other hand we need to wait for the contents of that location. Besides reading from a memory location, memory must also provide for writing onto it. This is done by supplying an additional line called control line. We will designate this line as R/W (read/write). Control line is used in the following way: if r/w=1, reading is done, and if opposite is true then writing is done on the memory location. Memory is the first element, and we need a few operation of our microcontroller.

The amount of memory contained within a microcontroller varies between different microcontrollers. Some may not even have any integrated memory (e.g. Hitachi 6503, now discontinued). However, most modern microcontrollers will have integrated memory. The memory will be divided up into ROM and RAM, with typically more ROM than RAM.

Typically, the amount of ROM type memory will vary between around 512 bytes and 4096 bytes, although some 16 bit microcontrollers such as the Hitachi H8/3048 can have as much as 128 Kbytes of ROM type memory.

ROM type memory, as has already been mentioned, is used to store the program code. ROM memory can be ROM (as in One Time Programmable memory), EPROM, or EEPROM.

The amount of RAM memory is usually somewhat smaller, typically ranging between 25 bytes to 4 Kbytes.

RAM is used for data storage and stack management tasks. It is also used for register stacks (as in the microchip PIC range of microcontrollers).

- ✓ **Central Processing Unit: -** Let add 3 more memory locations to a specific block that will have a built in capability to multiply, divide, subtract, and move its contents from one memory location onto another. The part we just added in is called "central processing unit" (CPU). Its memory locations are called registers.
- ✓

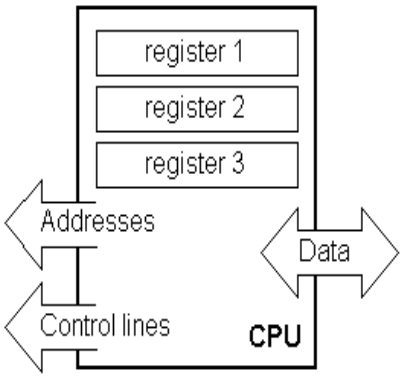

Example of simplified central processing unit with three registers

Figure 8: Simplified central processing unit with three registers

Registers are therefore memory locations whose role is to help with performing various mathematical operations or any other operations with data wherever data can be found. Look at the current situation. We have two independent entities (memory and CPU) which are interconnected, and thus any exchange of data is hindered, as well as its functionality. If, for example, we wish to add the contents of two memory locations and return the result again back to memory, we would need a connection between memory and CPU. Simply stated, we must have some "way" through data goes from one block to another.

Bus: - That "way" is called "bus". Physically, it represents a group of 8, 16, or more wires. There are two types of buses: address and data bus. The first one consists of as many lines as the amount of memory we wish to address and the other one is as wide as data, in our case 8 bits or the connection line. First one serves to transmit address from CPU memory, and the second to connect all blocks inside the microcontroller.

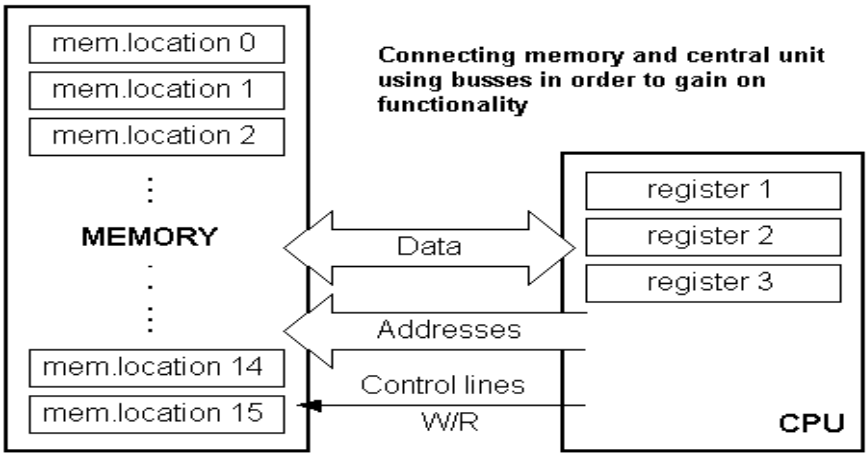

Figure 9: Showing connection between memory and central unit using buses

As far as functionality, the situation has improved, but a new problem has also appeared: we have a unit that's capable of working by itself, but which does not have any contact with the outside world, or with us! In order to remove this deficiency, let's add a block which contains several memory locations whose one end is connected to the data bus, and the other has connection with the output lines on the microcontroller which can be seen as pins on the electronic component.

- ✓ **Input-output unit: -**

Those locations we've just added are called "ports". There are several types of ports: input, output or bidirectional ports. When working with ports, first of all it is necessary to choose which port we need to work with, and then to send data to, or take it from the port.

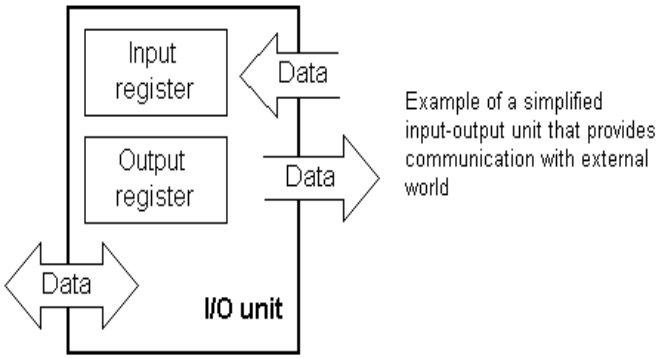

Figure 10: Simplified input-output unit communicating with external world

When working with it the port acts like a memory location. Something is simply being written into or read from it, and it could be noticed on the pins of the microcontroller.

Serial communication: -

As we have separate lines for receiving and sending, it is possible to receive and send data (info.) at the same time. So called full-duplex mode block which enables this way of communication is called a serial communication block. Unlike the parallel transmission, data moves here bit by bit, or in a series of bits what defines the term serial communication comes from. After the reception of data we need to read it from the receiving location and store it in memory as opposed to sending where the process is reversed. Data goes from memory through the bus to the sending location, and then to the receiving unit according to the protocol.

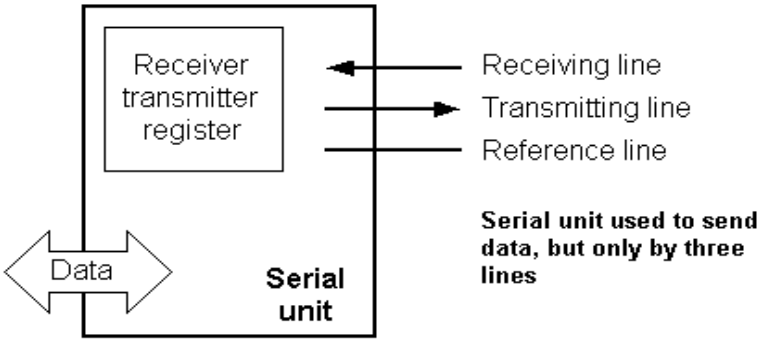

Figure 11: Serial unit sending data through three lines only

PIN CONFIGURATION:-

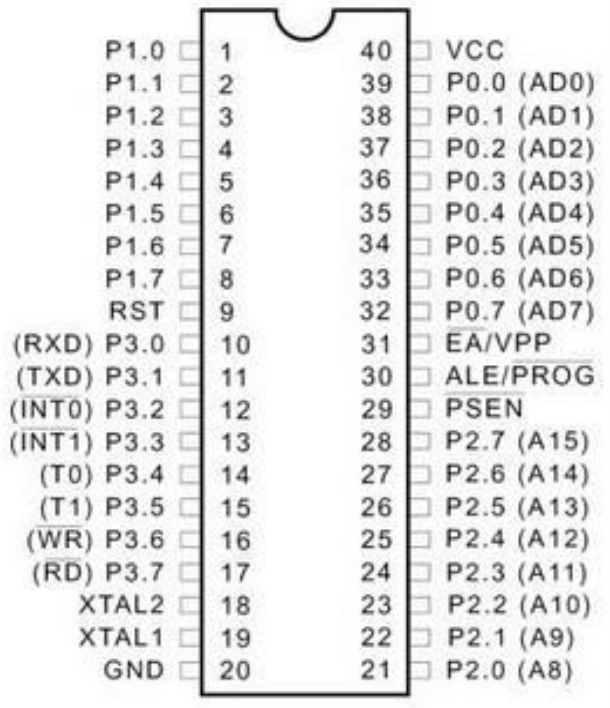

Figure12: Pin configuration of Microcontroller

VCC (Pin 40) Provides voltage to the chip +5V

GND (Pin 20) Ground

XTAL1 (Pin 19) and XTAL2 (Pin 18) Crystal Oscillator connected to pins 18, 19.

RST (Pin 9) RESET pin

External Access: EA 31

• Connected to VCC for on chip ROM

• Connected to Ground for external ROM containing the code Input Pin

Program Store Enable: PSEN 29

Output Pin

Address Latch Enable: ALE 30

Input\Output Pin: Active high.

I/O Port Pins and their Functions:

Four ports P0, P1, P2, P3 with 8 pins each, are making a total of 32 input/output pins.

PORT 0

Pins 32-39

Can be used as both Input and Output

External pull up resistors of 10K need to be connected

Dual role: 8051 multiplexes address and data through port 0 to save pins .AD0-AD7

ALE is used to de multiplex data and address bus

PORT 1

Pins 1 through 8

Both input and output

No dual function

Internal pull up registers

On RESET configured as output

PORT 2

Pins 21 through 28

No external pull up resistor required

Both input and output

Dual Function: Along with Port 0 used to provide the 16-Bit address for external memory. It provides higher address A8-A16

PORT 3

Pins 10 through 17

No external pull up resistors required

We have 4 ports in 8051 micro controller. They are port0, port1, port2, port3 which can

Be accessed as I/O ports. The pins of the micro controller are explained below.

Reset: It resets total 8051 micro controller.

RXD: It receives data in serial communication.

TXD: It transmits data in serial communication.

INT0: External interrupt for timer 0.

INT1: External interrupt for timer1

T0: Timer0.

T1: Timer1.

RD: To read into external memory.

WR: To write into external memory.

XTAL1 & XTAL2: To connect the crystal oscillator.

ALE: Address latch enable which is used to access the address locations

From external memory.

PSEN: Program store enable which is used for storing programming

Code into the external memory.

EA: External Access: 64 KB of ROM is the limit for external memory.

RAM ARCHITECTURE

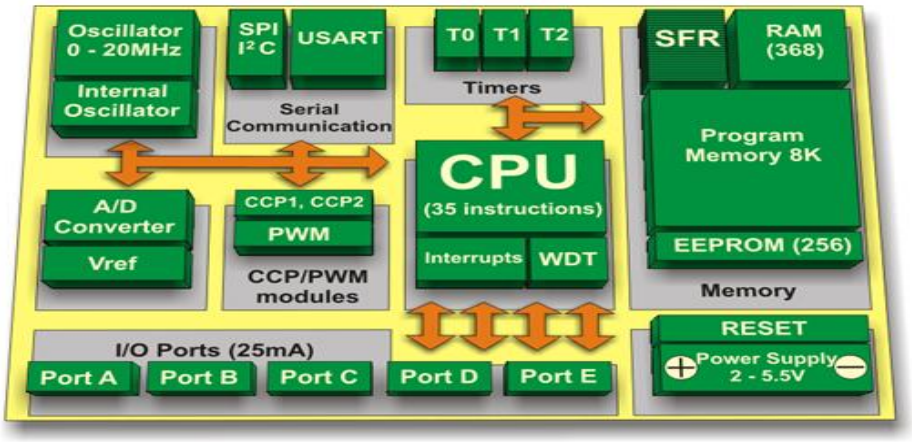

Figure13: RAM architecture of 8051 microcontroller

The 8051 has a bank of 128 bytes of Internal RAM. This Internal RAM is found on-chip on the 8051 so it is the fastest RAM available, and it is also the most flexible in terms of reading, writing, and modifying its contents. Internal RAM is volatile, so when the 8051 is reset this memory is cleared. The 128 bytes of internal ram is subdivided as shown on the memory map.

The first 8 bytes (00h - 07h) are "register bank 0". These alternative register banks are located in internal RAM in addresses 08h through 1Fh.Bit memory actually resides in internal RAM, from addresses 20h through 2Fh. The 80 bytes remaining of Internal RAM, from addresses 30h through 7Fh, may be used by user variables that need to be accessed frequently or at high-speed. This area is also utilized by the microcontroller as a storage area for the operating stack.

✓ **Register Banks: -**

The 8051 uses 8 "R" registers which are used in many of its instructions. These "R" registers are numbered from 0 through 7 (R0, R1, R2, R3, R4, R5, R6, and R7).These registers are generally used to assist in manipulating values and moving data from one memory location to another. The concept of register banks adds a great level of flexibility to the 8051.

✓ **Bit Memory: -**

The 8051, being a communication oriented microcontroller, gives the user the ability to access a number of bit variables. These variables may be either 1 or 0. There are 128 bit variables available to the user, numbered 00h through 7Fh. The user may make use of these variables with commands such as SETB and CLR. It is important to note that Bit Memory is really a part of Internal RAM. In fact, the 128 bit variables occupy the 16 bytes of Internal RAM from 20h through 2Fh.

✓ **Special Function Register (SFR) Memory:-**

Special Function Registers (SFRs) are areas of memory that control specific functionality of the 8051 processor. For example, four SFRs permit access to the 8051's 32 input/output lines. Another SFR allows a program to read or write to the 8051's serial port .SFR is a part of Internal Memory. This is not the case. When using this method of memory access (it's called direct address), any instruction that has an address of 00h through 7Fh refers to an Internal RAM memory address; any instruction with an address of 80h through FFh refers to an SFR control register.

✓ **Registers**

- **The Accumulator:-**

The Accumulator, as its name suggests, is used as a general register to accumulate the results of a large number of instructions. It can hold an 8-bit (1-byte) value and is the most versatile register

- **The "R" registers:-**

The "R" registers are a set of eight registers that are named R0, R1, etc. up to and including R7. These registers are used as auxiliary registers in many operations.

- **The "B" Register:-**

The "B" register is very similar to the Accumulator in the sense that it may hold an 8-bit (1-byte) value. The "B" register is only used by two 8051 instructions: MUL AB and DIV AB.

- **The Data Pointer (DPTR):-**

The Data Pointer (DPTR) is the 8051's only user-accessible 16-bit (2-byte) register. The Accumulator, "R" registers, and "B" register are all 1-byte values. DPTR, as the name suggests, is used to point to data. It is used by a number of commands which allow the 8051 to access external memory.

- **The Program Counter (PC):-**

The Program Counter (PC) is a 2-byte address which tells the 8051 where the next instruction to execute is found in memory. When the 8051 is initialized PC always starts at 0000h and is incremented each time an instruction is executed.

- **The Stack Pointer (SP):-**

The Stack Pointer, like all registers except DPTR and PC, may hold an 8-bit (1-byte) value. The Stack Pointer is used to indicate where the next value to be removed from the stack.

- **Addressing Modes:-**

An "addressing mode" refers to how you are addressing a given memory location. The addressing modes are as follows,

With an example of each:

Immediate Addressing MOV A, #20h

Direct Addressing MOV A, #30h

Indirect Addressing MOV A, @R0

External Direct MOVX A, @DPTR

Code Indirect MOVC A, @A+DPTR

Each of these addressing modes provides important flexibility.

- **Interrupts:-**

An interrupt is a special feature which allows the 8051 to provide the illusion of "multitasking," although in reality the 8051 is only doing one thing at a time.

- **Timers:-**

Timers are one of the categories of hardware time delays. Time delays are used to keep a system into halting System or sleepy mode. We have two timers-timer0, timer1.Hardware time delays are used to generate exact time delays.

6.2.2. PIR SENSOR

A passive infrared sensor (PIR sensor) is an electronic sensor that measures infrared (IR) light radiating from objects in its field of view. They are most often used in PIR-based motion detectors. The electronic sensor used to detect the movement of human being within a certain range of the sensor is called as PIR sensor or passive infrared sensor (approximately have an average value of 10m, but 5m to 12m is the actual detection range of the sensor). Fundamentally, pyro electric sensors that detect the levels of infrared radiation are used to make PIR sensors. There are different types of sensor and here let us discuss about PIR sensor with dome shaped Fresnel lens.

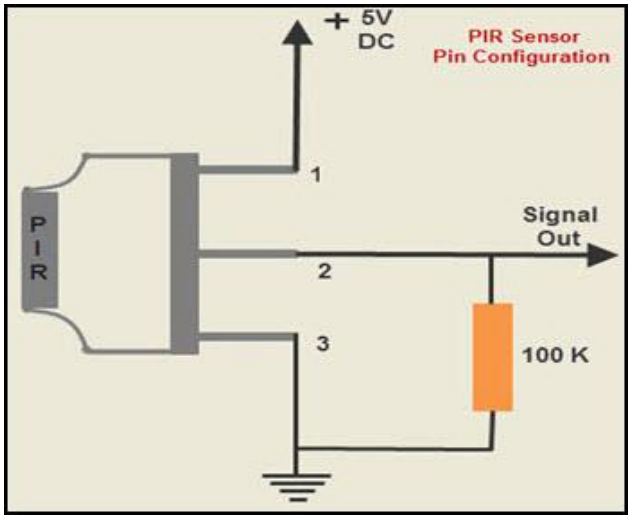

Figure14: Pin configuration of PIR sensor

The normal PIR sensor IC consists of three pins-Vcc, ground and output.

Pin	Name	Function
Out	Output	Pin that outputs 3.3v when infrared radiation is detected.
+	V+	Connect to Vcc(5v)
-	Ground	Connect to ground

Table1: PIR Sensor PIN Functions

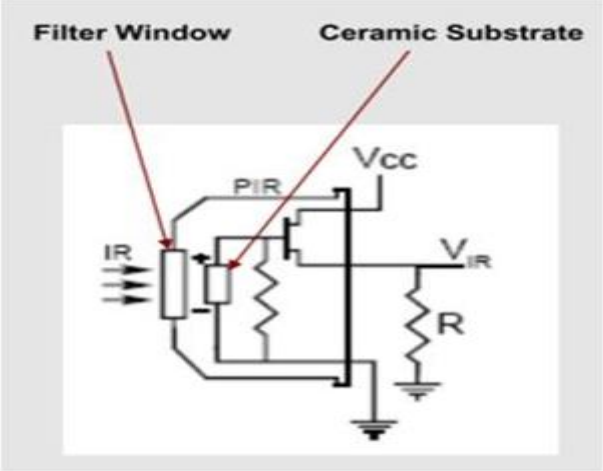

Figure15: PIR sensor pins

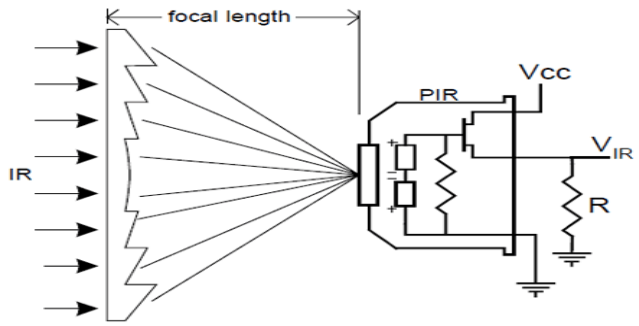

Figure16: PIR sensor focal length

Figure17: PIR sensor

A passive infrared system detects energy emitted by objects in the field of view and may use signal-processing algorithms to extract the desired information. It does not emit any energy of its own for the purposes of detection. Passive infrared systems can detect presence, occupancy, and count.

Passive Infrared Sensors are of two types: Thermal & Quantum.

Thermal type sensors have no wavelength dependence. They use the infrared energy as heat and their photosensitivity is independent of wavelength.

6.2.3. Capacitor

The capacitor is a component which has the ability or “capacity” to store energy in the form of an electrical charge producing a potential difference (Static Voltage) across its plates, much like a small rechargeable battery.

There are many different kinds of capacitors available from very small capacitor beads used in resonance circuits to large power factor correction capacitors, but they all do the same thing, they store charge.

In its basic form, a capacitor consists of two or more parallel conductive (metal) plates which are not connected or touching each other, but is electrically separated either by air or by some form of a good insulating material such as waxed paper, mica, ceramic, plastic or some form of a liquid gel as used in electrolytic capacitors. The insulating layer between capacitors plates is commonly called the Dielectric.

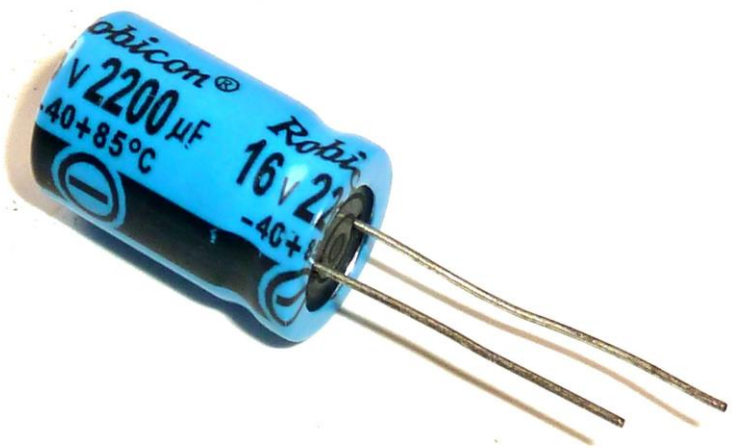

Figure 18: Capacitor

The standard unit of capacitance is the farad, abbreviated. This is a large unit; more common units are the microfarad, abbreviated µF (1 µF =10-6F) and the Pico farad, abbreviated pF (1 pF = 10-12 F).Capacitors can be fabricated onto integrated circuit (IC) chips. They are commonly used in conjunction with transistors in dynamic random access memory (DRAM). The capacitors help maintain the contents of memory. Because of their tiny physical size, these components have low capacitance. They must be recharged thousands of times per second or the DRAM will lose its data.

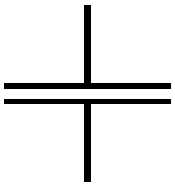

Figure 19: Symbol of capacitor

When you connect a capacitor to a battery, here's what happens:

• The plate on the capacitor that attaches to the negative terminal of the battery accepts electrons that the battery is producing.

• The plate on the capacitor that attaches to the positive terminal of the battery loses electrons to the battery.

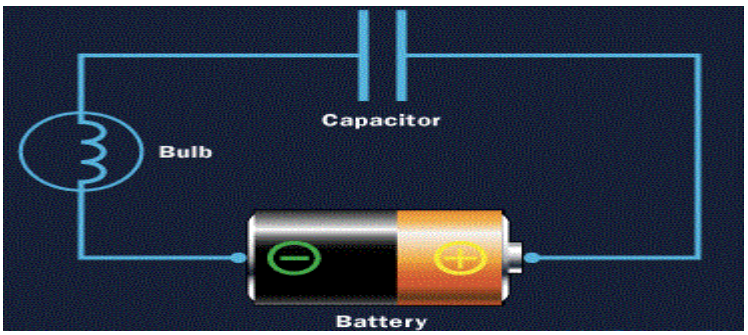

Figure 20: Capacitor and battery connection

- **<u>TYPES OF CAPACITORS:</u>**

✓ **ELECTROLYTIC CAPACITOR: -**

An electrolytic capacitor is a type of capacitor that uses an ionic conducting liquid as one of its plates with a larger capacitance per unit volume than other types. They are often referred to in electronics usage simply as "electrolytic". They are valuable in relatively high-current and low-frequency electrical circuits. This is especially the case in power-supply filters, where they store charge needed to moderate output voltage and current fluctuations in rectifier output. They are also widely used as coupling capacitors in circuits where AC should be conducted but DC should not. Electrolytic capacitors can have a very high capacitance, allowing filters made with them to have very low corner frequencies.

✓ **MICA CAPACITOR: -**

Mica capacitors are high precision high stability high reliability capacitors. They are available in small values, and are mostly used at high frequencies.

- ✓ **PAPER CAPACITOR: -**

Common in antique radio equipment, paper dielectric and aluminum foil layers rolled into a cylinder and sealed with wax. Low values up to a few µF, working voltage up to several hundred volts, oil-impregnated bathtub types to 5 kV used for motor starting and high-voltage power supplies, and up to 25 kV for large oil-impregnated energy discharge types.

- ✓ **TRIMMER CAPACITOR: -**

These capacitors have a rotating plate (which can be rotated to change the capacitance) separated from a fixed plate by a dielectric medium. Typically values range from 5 pF to 60 pF.

- ✓ **CERAMIC CAPACITOR:-**

Ceramic capacitors are most commonly found in every electrical device and it uses a ceramic material as the dielectric. The ceramic capacitor is a non-polarity device that means they do not have polarities. So we can connect it in any direction on a circuit board.

For this reason, they are generally much safer than electrolytic capacitors. Here is the symbol for a non-polarized capacitor given below. Many types of capacitors, such as the tantalum bead do not have a polarity.

Figure 21:-Ceramic capacitor (22pf)

6.2.4. RESISTOR

A resistor is a two-terminal electronic component that produces a voltage across its terminals that is proportional to the electric current passing through it in accordance with Ohm's law:

V = IR

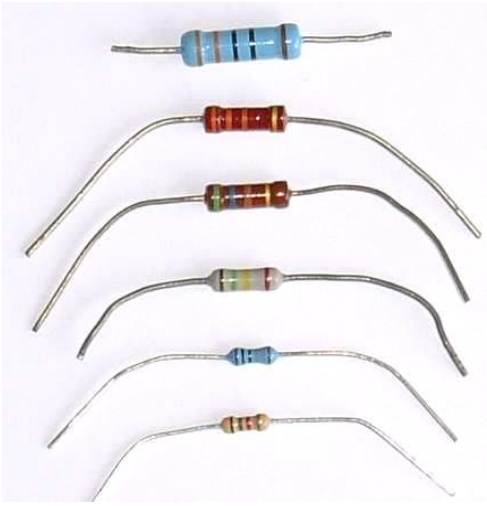

Figure 22: resistors

Resistors are common elements of electrical equipment and are ubiquitous in electronic equipment. Practical resistors as discrete components can be composed of various compounds and forms. Resistors are also implemented within integrated circuits. The electrical function of a resistor is specified by its resistance: common commercial resistors are manufactured over a range of more than nine orders of magnitude. The nominal value of the resistance falls within the manufacturing tolerance, indicated on the component. Resistors can be integrated into hybrid and printed circuits, as well as integrated circuits. Size, and position of leads (or terminals) are relevant to equipment designers; resistors must be physically large enough not to overheat when dissipating their power.

Figure 23: Symbol of resistor

- **Function:-** Resistor restrict the flow of electric current, for example a resistor is placed in series with a light-emitting diode(LED) to limit the current passing through the LED.
- **TYPES OF RESISTORS:-**

FIXED VALUE RESISTORS:-

It includes two types of resistors as carbon film and metal film. These two types are explained under

CARBON FILM RESISTORS: -

During manufacture, at in film of carbon is deposited onto a small ceramic rod. The resistive coating is spiraled away in an automatic machine until the resistance between these two ends of the rods is as close as possible to the correct value. Metal leads and end caps are added, the resistors is covered with an insulating coating and finally painted with collared bands to indicate the resistor value.

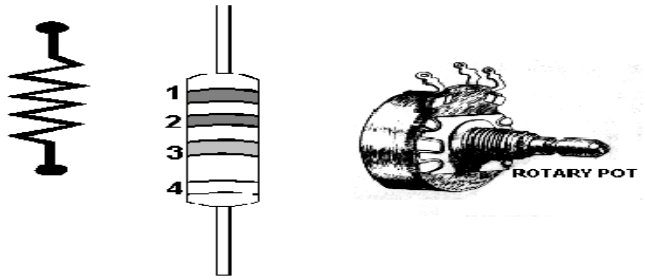

Figure 24: Carbon film resistors

Fig Carbon Film Resistors Another example for a Carbon 22000 Ohms or 22 Kilo-Ohms also known as 22K at 5% tolerance: Band 1 = Red, 1st digit Band 2 = Red, 2nd digit Band 3 = Orange, 3rd digit, multiply with zeros, in this case 3 zero's Band 4 = Gold, Tolerance, 5% .

METAL FILM RESISTORS:-

Metal film and metal oxides resistors are made in a similar way, but can be made more accurately to within ±2% or ±1% of their nominal value there are some difference in performance between these resistor types, but none which affects their use in simple circuit.

WIRE WOUND RESISTOR:-

A wire wound resistor is made of metal resistance wire, and because of this, they can be manufactured to precise values. Also, high wattage resistors can be made by using a thick wire material. Wire wound resistors cannot be used for high frequency circuits. Coils are used in high frequency circuit. Wire wound resistors in a ceramic case, strengthened with special cement. They have very high power rating, from 1 or 2 watts to dozens of watts. These resistors can become extremely hot when used for high power application, and this must be taken into account when designing the circuit.

220 ohm resistor: -

A 220Ω resistor has red, red, and brown stripes in that order. The last stripe represents the tolerance. Gold means ±5%.

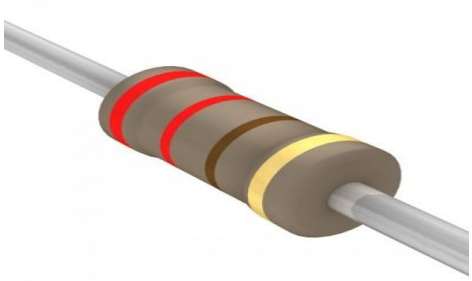

Figure 25:220ohm resistor

6.2.5. L293D MOTOR DRIVER IC: - L293D is a typical Motor driver or Motor Driver IC which allows DC motor to drive on either direction. L293D is a 16-pin IC which can control a set of two DC motors simultaneously in any direction. It means that you can control two DC motor with a single L293D IC.

Input3	Input4	Action
Low	Low	Door remain closed
High	Low	Door opens
Low	High	Door closes
High	High	Door remains open

Table2: Function of L293D Motor Driver

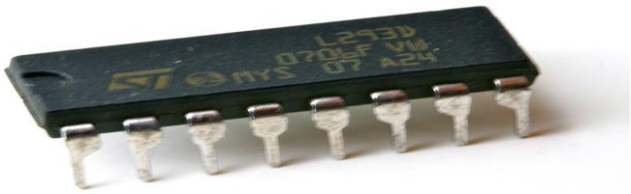

Figure 26:L293D motor driver

It works on the concept of H-bridge. H-bridge is a circuit which allows the voltage to be flown in either direction. As you know voltage need to change its direction for being able to rotate the motor in clockwise or anticlockwise direction, hence H-bridge IC are ideal for driving a DC motor.

In a single L293D chip there are two h-Bridge circuit inside the IC which can rotate two dc motor independently. Due its size it is very much used in robotic application for controlling DC motors. Given below is the pin diagram of a L293D motor controller.

Pin No	Function	Name
1	Enable pin for Motor 1; active high	Enable 1,2
2	Input 1 for Motor 1	Input 1
3	Output 1 for Motor 1	Output 1
4	Ground (0V)	Ground
5	Ground (0V)	Ground
6	Output 2 for Motor 1	Output 2
7	Input 2 for Motor 1	Input 2
8	Supply voltage for Motors; 9-12V (up to 36V)	Vcc_2
9	Enable pin for Motor 2; active high	Enable 3,4
10	Input 1 for Motor 1	Input 3
11	Output 1 for Motor 1	Output 3
12	Ground (0V)	Ground
13	Ground (0V)	Ground
14	Output 2 for Motor 1	Output 4
15	Input2 for Motor 1	Input 4
16	Supply voltage; 5V (up to 36V)	Vcc_1

There are two Enable pins on l293d. Pin 1 and pin 9, for being able to drive the motor, the pin 1 and 9 need to be high. For driving the motor with left H-bridge you need to enable pin 1 to high.

And for right H-Bridge you need to make the pin 9 to high. If anyone of the either pin1 or pin9 goes low then the motor in the corresponding section will suspend working. It's like a switch.

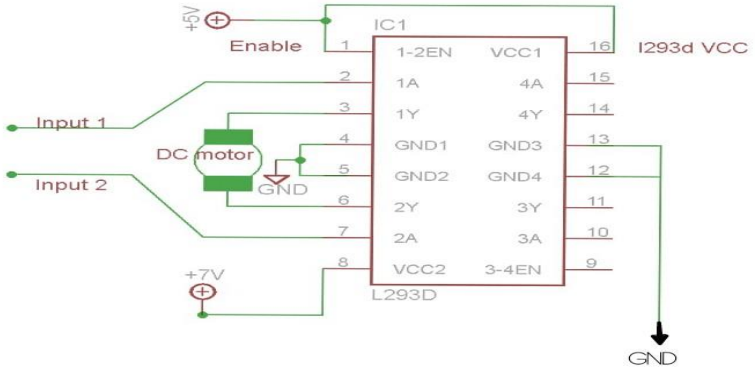

Figure 27: circuit diagram for l293d motor driver

6.2.6. DC MOTOR

A DC motor is any of a class of rotary electrical machines that converts direct current electrical energy into mechanical energy. The most common types rely on the forces produced by magnetic fields. Nearly all types of DC motors have some internal mechanism, either electromechanical or electronic; to periodically change the direction of current flow in part of the motor.

Figure 28: Fleming Left Hand rule for dc motor

The direction of rotation of a this motor is given by Fleming's left hand rule, which states that if the index finger, middle finger, and thumb of your left hand are extended mutually perpendicular to each other and if the index finger represents the direction of magnetic field, middle finger indicates the direction of current, then the thumb represents the direction in which force is experienced by the shaft of the DC motor.

Figure 29: Dc motor

6.2.7. Crystal Oscillator

Electronic oscillator is an electronic component which basically used to generate periodic ac current signal. In television radio transmitters are broad casted using the signals generated by oscillators.

One of the most important features of any oscillator is its frequency stability. Some of the factors that affect the frequency stability of an oscillator generally include variations in temperature, variations in the load, as well as changes to its DC power supply voltage.

When a voltage source is applied to a small thin piece of quartz crystal, it begins to change shape producing a characteristic known as the Piezo-electric effect. This Piezo-electric Effect is the property of a crystal by which an electrical charge produces a mechanical force by changing the shape of the crystal and vice versa.

The atoms, molecules, ions are packed in an order in three spatial dimensions with repeating pattern to form a crystal that's appropriate electrical transducers. A very small, thin piece or wafer of cut quartz with the two parallel surfaces metalized to make the required electrical connections. The physical size and thickness of a piece of quartz crystal is tightly controlled.

Quartz crystals are manufactured for frequencies from a few tens of kilohertz to tens of megahertz. More than two billion (2×109) crystals are manufactured annually. Most are small devices for consumer devices such as wristwatches, clocks, radios, computers and cell phones. Quartz crystals are also found inside test and measurement equipment, such as counters, signal generators, and oscilloscopes.

Figure 30: crystal oscillator

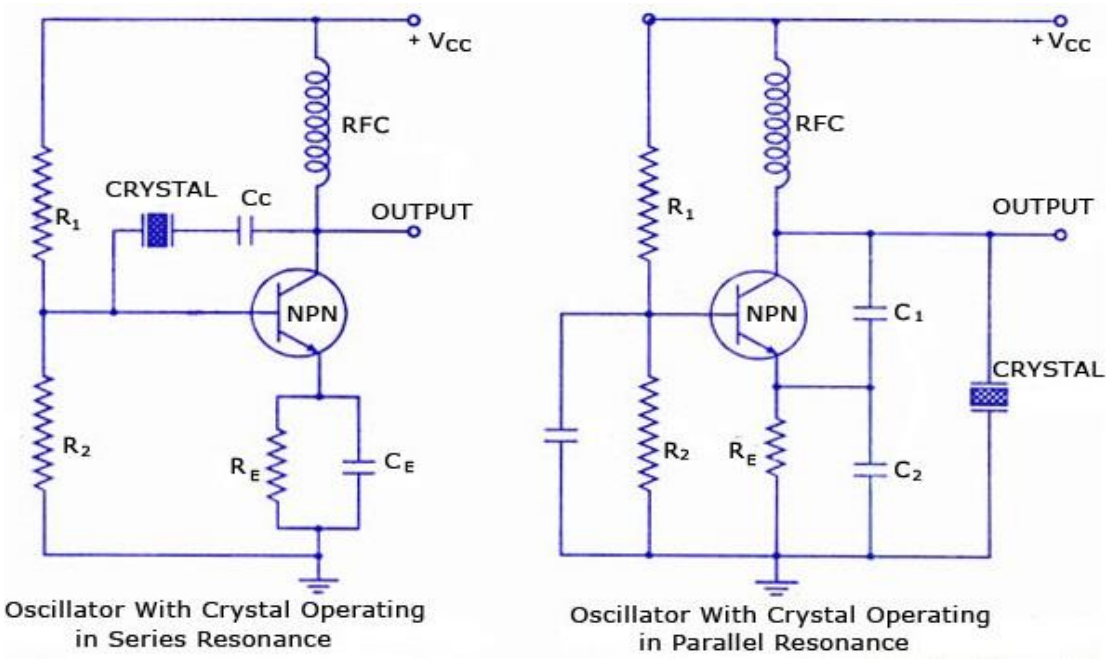

Figure 31: circuit diagram of crystal oscillator

Operation: -

A crystal is a solid in which the constituent atoms, molecules or ions are packed in a regularly ordered, repeating pattern extending in all three spatial dimensions.

Almost any object made of an elastic material could be used like a crystal, with appropriate transducers, since all objects have natural resonant frequencies of vibration. For example, steel is very elastic and has a high speed of sound. It was often used in mechanical filters before quartz. The resonant frequency depends on size, shape, elasticity, and the speed of sound in the material. High-frequency crystals are typically cut in the shape of a simple, rectangular plate. Low-frequency crystals, such as those used in digital watches, are typically cut in the shape of a

tuning fork. For applications not needing very precise timing, a low-cost ceramic resonator is often used in place of a quartz crystal.

When a crystal of quartz is properly cut and mounted, it can be made to distort in an electric field by applying a voltage to an electrode near or on the crystal. This property is known as piezoelectricity. When the field is removed, the quartz will generate an electric field as it returns to its previous shape, and this can generate a voltage. The result is that a quartz crystal behaves like a circuit composed of an inductor, capacitor and resistor, with a precise resonant frequency.

Quartz has the further advantage that its elastic constants and its size change in such a way that the frequency dependence on temperature can be very low. The specific characteristics will depend on the mode of vibration and the angle at which the quartz is cut (relative to its crystallographic axes). Therefore, the resonant frequency of the plate, which depends on its size, will not change much, either. This means that a quartz clock, filter or oscillator will remain accurate. For critical applications the quartz oscillator is mounted in a temperature-controlled container, called a crystal oven, and can also be mounted on shock absorbers to prevent perturbation by external mechanical vibrations.

6.2.8. PUSH BUTTON

A push button switch is a small, sealed mechanism that completes an electric circuit when you press on it. When it's on, a small metal spring inside makes contact with two wires, allowing electricity to flow. When it's off, the spring retracts, contact is interrupted, and current won't flow. The body of the switch is made of non-conducting plastic.

Push-Buttons are normally-open tactile switches. Push buttons allow us to power the circuit or make any particular connection only when we press the button. Simply, it makes the circuit connected when pressed and breaks when released. A push button is also used for triggering of the SCR by gate terminal. These are the most common buttons which we see in our daily life electronic equipment’s. Some of the applications of the Push button are mentioned at the end of the article.

Type of push button:-

Momentary switches and Non- Momentary switches.

Momentary switches work only as long as you press on them, like the buttons on a phone, calculator or door buzzer. They can be subdivided into normally-on and normally-off types.

Non-momentary switches take one push to turn on, another to turn off. TVs and stereos use non-momentary switches for their power buttons.

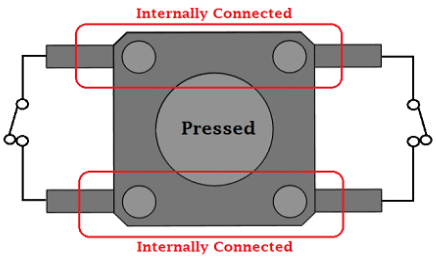

Figure 32: push button connection

Figure 33: push button

6.2.9. LED

A light-emitting diode (LED) is a semiconductor device that emits visible light when an electric current passes through it. The light is not particularly bright, but in most LEDs it is monochromatic, occurring at a single wavelength. An LED consists of two elements of processed material called P-type semiconductors and N-type semiconductors. These two elements are placed in direct contact, forming a region called the P-N junction. The holes lie in the valence band and the free electrons are placed in the conduction band. When there is a forward bias in the p-n junction, the electron which is a part of the n-type semiconductor material would overrun the p-n junction and join with the holes in the p-type semiconductor material. Therefore regarding the holes, the free electrons would be at the energy level being higher. When there is a recombination of free electrons at the hole, there would be a change regarding the energy level concerned from a value that is higher to the value that is lower and it drops from the conduction band to the valance band. The output from an LED can range from red (at a wavelength of approximately 700 nanometers) to blue-violet (about 400 nanometers).

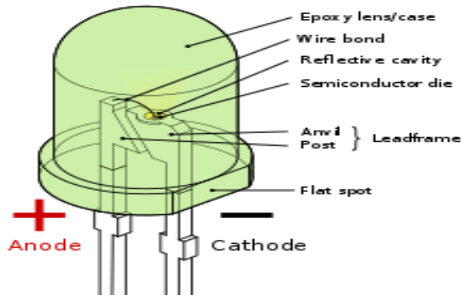

Figure 34: Parts of LED

This is the most popular kind of diode. When it works in the forward bias condition, the current flows through the junction to produce the light.

Photodiodes - The electrons and holes are generated as light strikes across the p-n junction causing the current to flow. Theses diodes can work as photo detector and are used to generate electricity.

Constant current diodes - This diode keeps the current constant even when the voltage applied keeps changing. It consists of JFET (junction – field effect transistor) with the source shorted to the gate in order to function like a two - terminal current limiter or current source.

Scotty diode - These diodes are used in RF applications and clamping circuits. This diode has lower forward voltage drop as against the silicon PN junction diodes.

Shockley diode - This is a four layer diode which is also known as PNPN diode. This diode is similar to thyristor where the gate is disconnected.

Step recovery diodes - This semiconductor diode has the ability to generate short pulses and hence it is used in microwave applications as a pulse generator.

Tunnel diodes - This diode is heavily doped in the forward bias condition that has a negative resistance at extremely low voltage and a short circuit in the negative bias direction. This diode is useful as a microwave amplifier and in oscillators.

Varactor diodes - This diode works in reverse bias condition and restrict the flow of current through the junction. Depending on the amount of biasing, the width of the depletion region keeps varying. This diode comprises of two plates of a capacitor with the depletion region amidst them. The variation in capacitance depends upon the depletion region and this can varied by altering the reverse bias on the diode.

PIN diodes **-** This diode has intrinsic semiconductor sandwiched between P- type and N- type region. Doping does not occur in this type of diode and thereby the intrinsic semiconductor increases the width of the depletion region. They are used as photodiodes and radio frequency switches.

LASER diode - This diode produces laser type of light and is expensive as compared to LED. They are widely used in CD and DVD drives.

Transient voltage suppression diodes - This diode is used to protect the electronics that are sensitive against voltage spikes**.**

Gold doped diodes - These diodes use gold as they do pant and can operate at signal frequencies even if the forward voltage drop increases.

Super barrier diodes - These are also called as the rectifier diodes. This diodes have the property of low reverse leakage current as that of normal p-n junction diode and low forward voltage drop as that of Scotty diode with surge handling ability.

Point contact diodes pl**-** The construction of this diode are simpler and are used in analog applications and as a detector in radio receivers. This diode is built of n – type semiconductor and few conducting metals aced to be in contact with the semiconductor. Some metals move from towards the semiconductor to form small region of p- tpye semiconductor near the contact.

Peltier diodes - This diode is used as heat engine and sensor for thermoelectric cooling.

Gunn diode - This diode is made of materials like GaAs or InP that exhibit a negative differential resistance region.

Crystal diode - These are a type of point contact diodes which are also called as Cat's whisker diode. This diode comprises of a thin sharpened metal wire which is pressed against the semiconducting crystal. The metal wire is the anode and the semiconducting crystal is the cathode. These diodes are obsolete.

Avalanche diode - This diode conducts in reverse bias condition where the reverse bias voltage applied across the p-n junction creates a wave of ionization leading to the flow of large current. These diodes are designed to breakdown at specific reverse voltage in order to avoid any damage.

Silicon controlled rectifier - As the name implies this diode can be controlled or triggered to the ON condition due to the application of small voltage. They belong to the family of Thyristors and is used in various fields of DC motor control, generator field regulation, lighting

system control and variable frequency drive. This is three terminal devices with anode, cathode and third controlled lead or gate.

Vacuum diodes - This diode is two electrode vacuum tubes which can tolerate high inverse voltages.

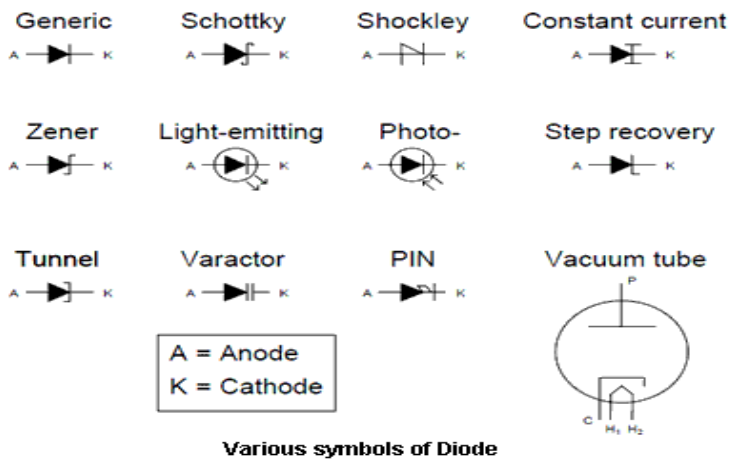

Figure: 35

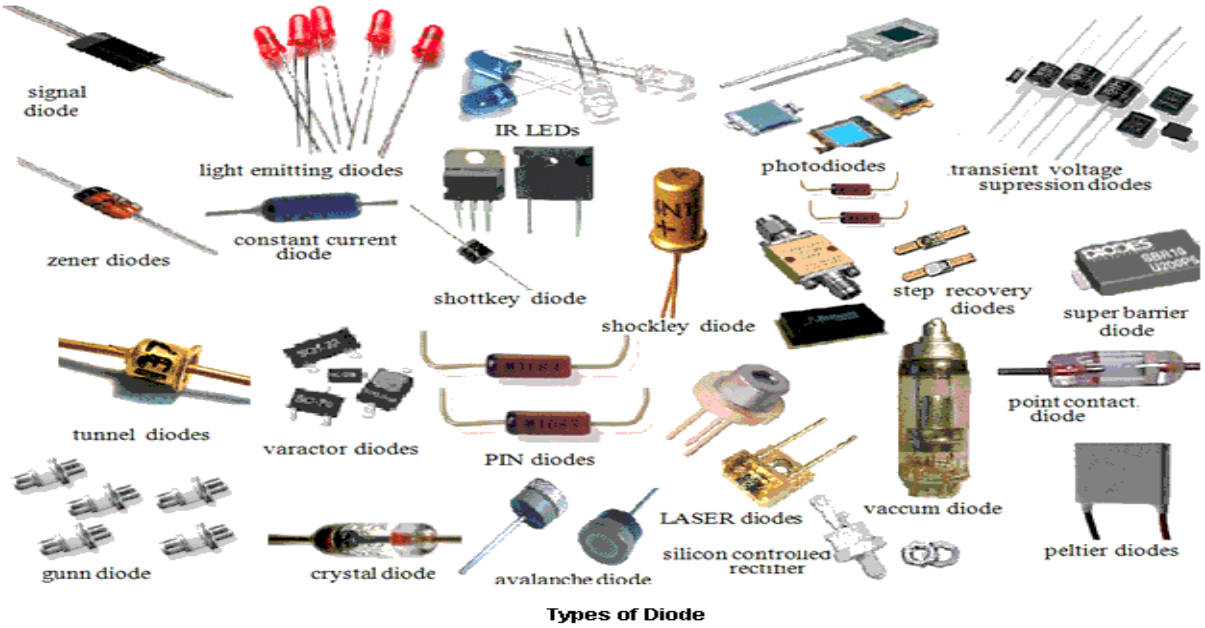

Figure: 36

Generic diodes (Small signal and large signal):-

A p-n junction diode is the simplest semiconductor device. It is a two-terminal, bipolar, unilateral rectifying device that conducts only in one direction. The generic diodes are used in the following fields:

· Rectification in power supply circuits

· Extraction of modulation from radio signals in a radio receiver and in protection circuits where large transient currents may appear on low current transistors or ICs in interfacing with relays or other high power devices.

· Used in series with power inputs to electronic circuits where only one of negative or positive polarity voltage is desired.

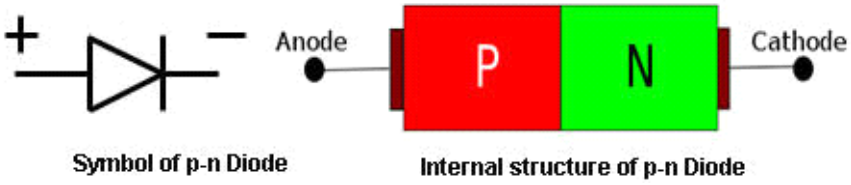

Figure: 37

Construction: -

A simple p-n diode is a junction where p-type and n-type layers are doped on a silicon or germanium wafer. A p-type semiconductor is formed by doping of trivalent or acceptor impurity atoms on a pure silicon or germanium thereby having an excess concentration of holes. An n-type semiconductor is formed by doping of pentavalent or donor impurity atoms on a pure silicon or germanium thereby having an excess concentration of electrons. So, holes are the majority charge carriers in a p-type region whereas electrons in the n-type region. Electron-holes pairs are thermally generated in both types which constitute the minority charge carriers. It is remarkable that a p-type material is not positively charged in spite of having excessive holes while an n-type material is not negatively charged in spite of excessive electrons. This is because in a p-type material along with holes, the anions are generated and the total number of protons and electrons still remain the same. This is similarly observed for the n-type material.

The junction of a p-type and n-type doping on silicon or germanium wafer produces a small region of the order of micrometers which is depleted from the free charge carriers. This region is formed due to diffusion of holes from a p-type and electrons from an n-type material called as the depletion region or space charge region or transition region. The p-type region to the left of the depletion region is having acceptor negative ion layer and to the right are donor positive ion

layer which induces an electric flux or potential difference across the junction. The charge concentration is positive on left of the junction and negative on the right of the junction. This potential barrier stops the holes to migrate into n-type region and electrons to migrate into p-type region as the potential rises for holes and electrons will allow migrating in to n-type and p-type regions. The charge carrier regions around the depletion regions are also called as the uncovered regions. This is shown in graph below.

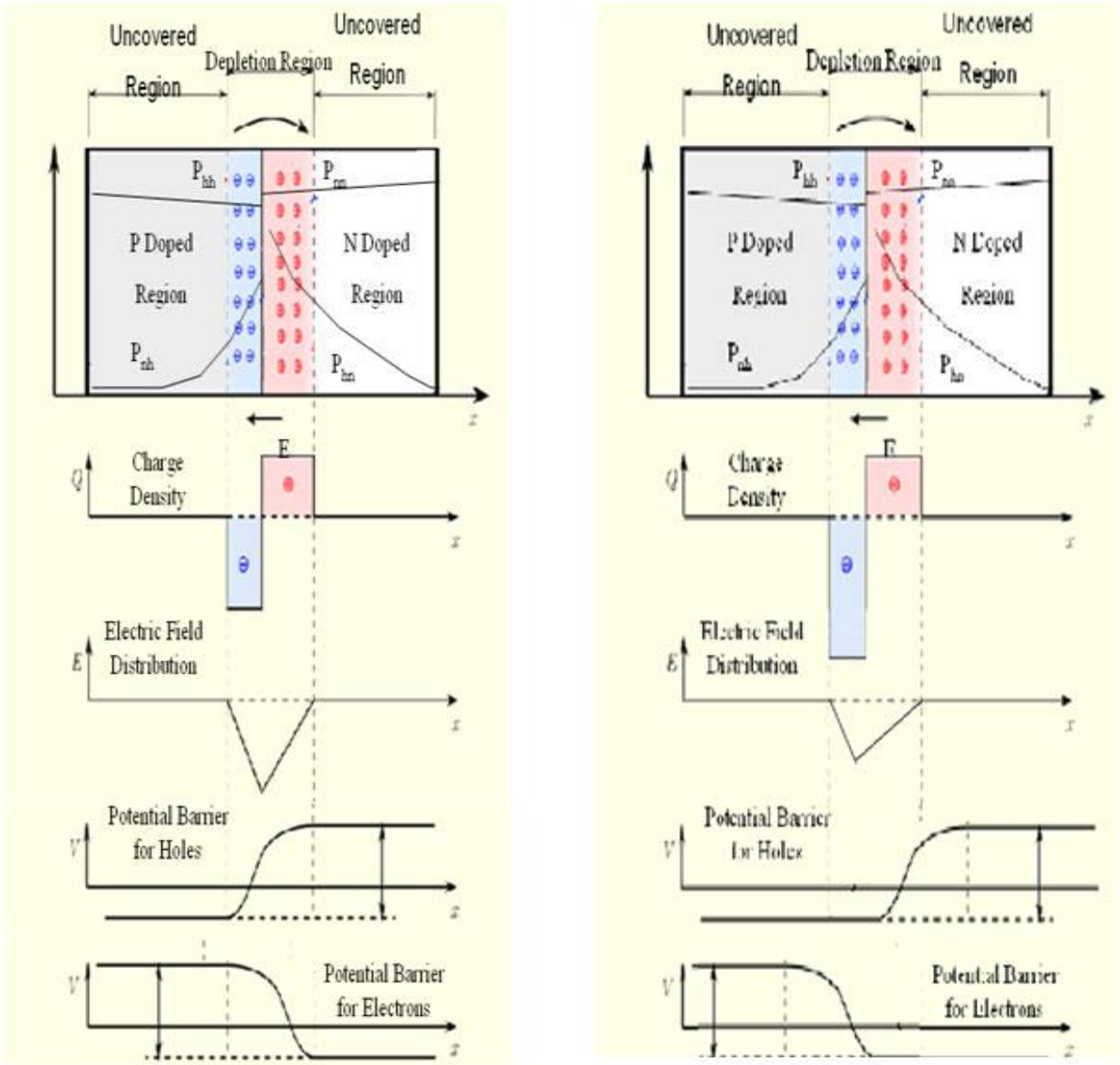

Graph diagram of Linear Graded diode and Step Graded diode

Figure: 38

It is also important that the minority charge currents i.e. electron current in p-type region and hole current in n-type region decreases exponentially across the diode length. The minority current is due to electron hole pairs generated thermally and dependent upon temperature. These

currents are so small in magnitude in the order of microamperes. However in conduction state, the current through the diode crystal remains stable. The total current is a sum of minority and majority charge currents due to bipolar nature of the diode. The majority charge currents is hole current in p-type and electron current in n-type are reduced as they migrate near junction due recombination. The minority currents is electron current in p-type and hole current in n-type are maximum near junction and reduces as they migrate away from the junction as an exponential function. The majority charge currents in their regions after crossing the junction are the diffusion currents while before junction are drift currents.

Concept of Ohmic contacts – In addition to PN junction diode, there is a two metal semiconductor junctions originating from the leads in order to connect the device. It is assumed that the resistance of these metal semiconductor contacts remain constant despite of the magnitude and direction of current. During the diode operation, the applied voltage is solely effective for increasing or decreasing the potential barrier height of the PN junction.

Principle and Operation:

The possible configurations for a diode are:

1. Open circuited
2. Short circuited
3. Forward biased
4. Reverse biased

1. Open circuited: In open circuited condition, the current that flows through the diode is zero (I = 0). The potential barrier at the PN junction remains the same as created in the diode fabrication.

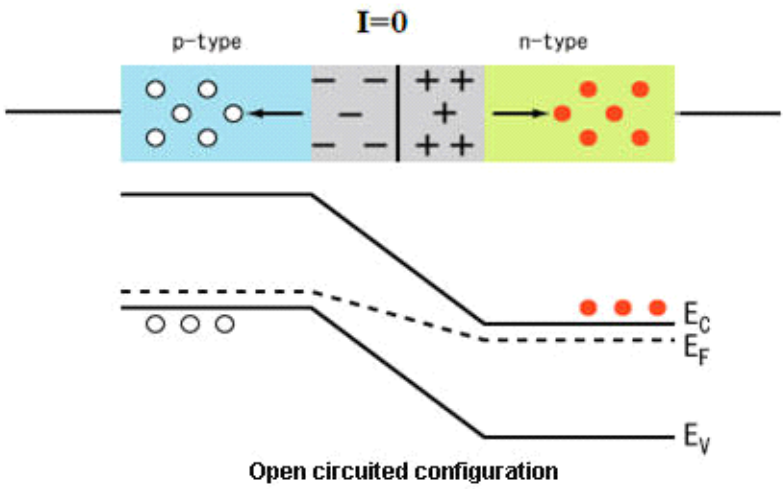

Figure: 39

2. <u>Short circuit:</u> In short circuited condition, the sum voltage in the loop must be zero. So it is assumed, that the potential barrier at the PN junction is compensated by the potential drops at the metal semiconductor junctions. The holes supplied by the n-region must be driven to the p region which is physically impossible. The similar discussion applies to the electron current in then-region.

<u>Conclusion:</u> The potential barrier height cannot be measured directly by a multimeter.

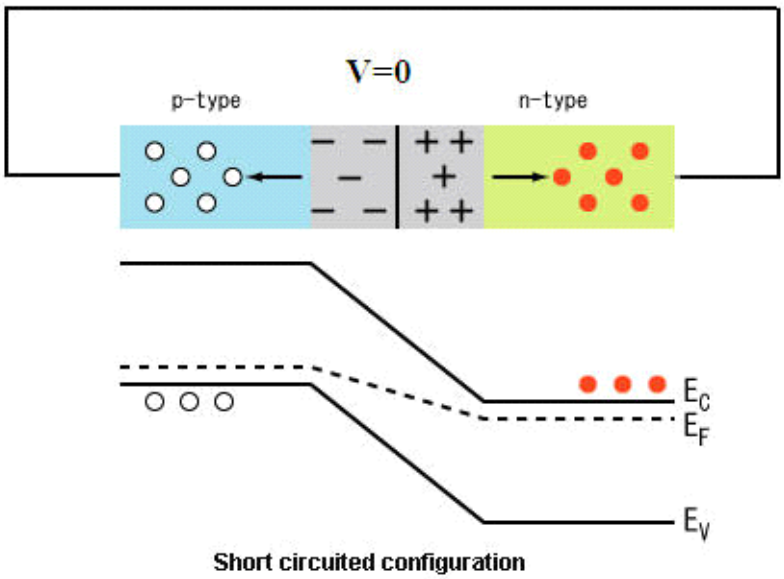

Figure: 40

3. <u>Forward bias:</u> In forward bias condition, higher or positive potential is applied at the anode and negative or lower potential is applied at the cathode of a diode. The positive potential at anode repels the holes in p-region towards n-region while negative potential at the cathode repels electrons in n-region towards p-region. Thus, the height of the potential barrier reduces. The depletion region disappears when the applied voltage equals to the potential barrier and a large current flows through the diode. The voltage required to drive the diode into a state of conduction is called as the 'Cut in/Offset/Threshold/Firing voltage'. The current is of considerable magnitude as it is dominantly constituted by the majority charge currents that is the hole current in the p-region and the electron current in the n-region. The current that flows from anode to cathode is limited by the crystal bulk resistance, recombination of charges and the ohmic contact resistances at the two metal semiconductor junctions. The current is restricted to mille Amperes order.

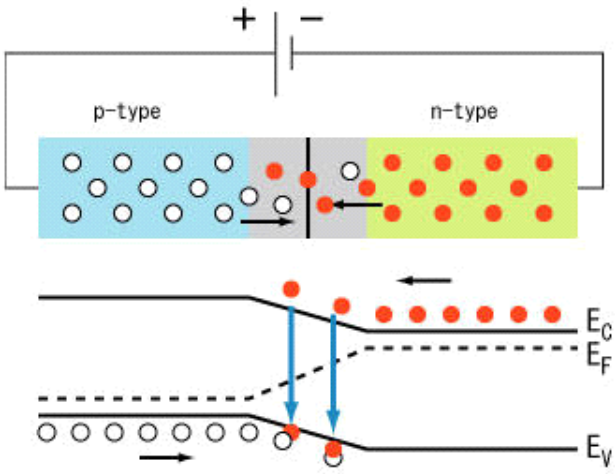

Forward Bias configuration

Figure: 41

4. <u>Reverse Bias:</u> In reverse bias condition, the higher or positive potential is applied at the cathode and negative or lower potential is applied at the anode. The negative potential at anode attracts the holes in p-region that are away from the n-region while positive potential at the cathode attracts electrons in n-region that are away from the p-region. The applied voltage increases the height of the potential barrier. The current flows dominantly due to the minority charge currents that is the electron current in p-region and the whole current in n-region. Thus a constant current of negligible magnitude flows in the reverse direction which is called as the 'Reverse saturation current'. Practically, the diode remains in a state of non – conduction. The reverse saturation current is of the order of microamperes in a germanium diode or Nano amperes in a silicon diode if the reverse voltage exceeds the limit of 'breakdown/zener/Peak inverse/Peak reverse voltage', the potential breakdown that occurs leads to a large reverse current.

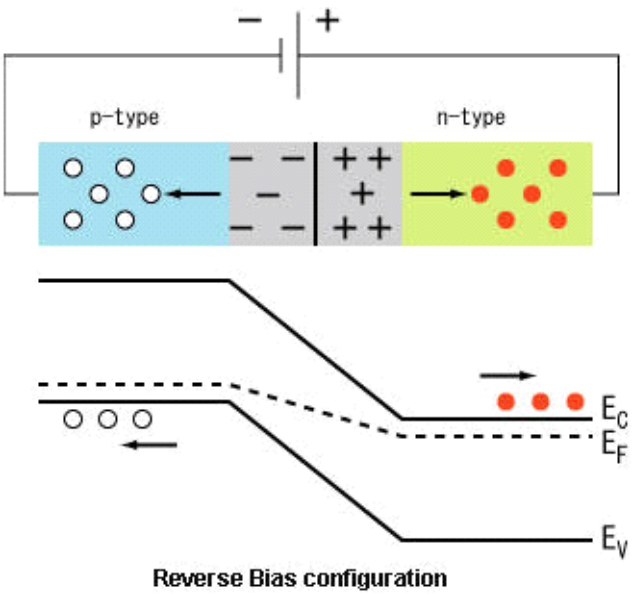

Figure:42

Characteristics:

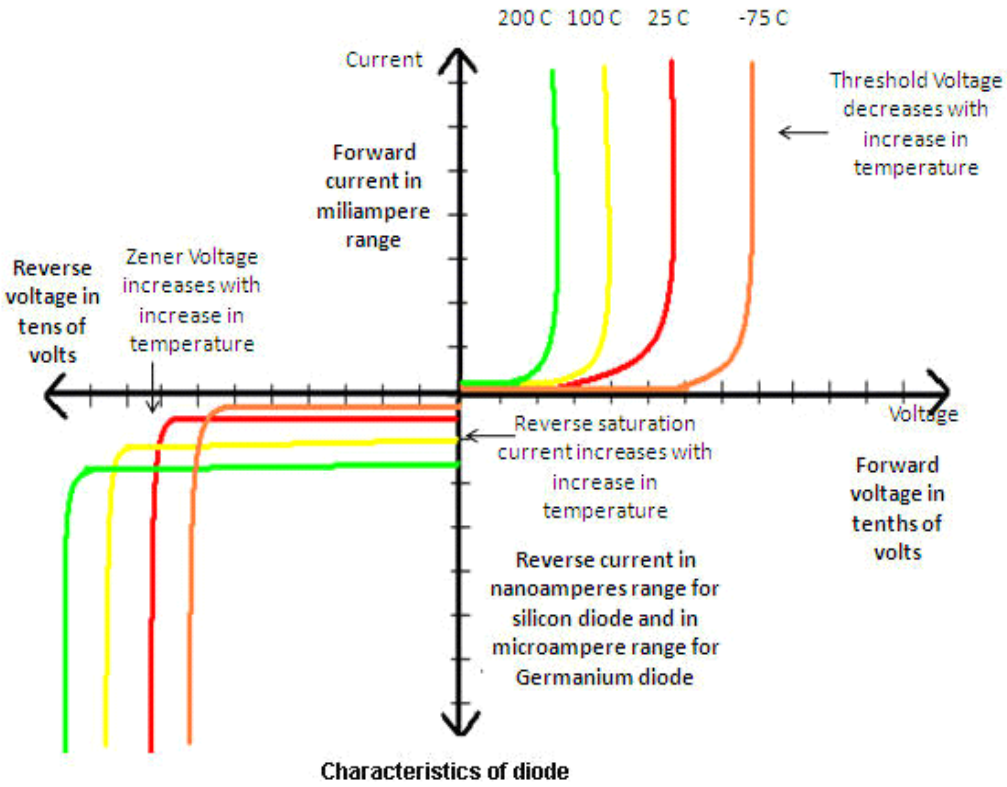

Figure: 43

6.2.10. TRANSISTOR BC547:-

BC547 is a NPN transistor hence the collector and emitter will be left open (Reverse biased) when the base pin is held at ground and will be closed (Forward biased) when a signal is provided to base pin. BC547 has a gain value of 110 to 800; this value determines the amplification capacity of the transistor. The maximum amount of current that could flow through the Collector pin is 100mA, hence we cannot connect loads that consume more than 100mA using this transistor.

The transistor terminals require a fixed DC voltage to operate in the desired region of its characteristic curves. This is known as the biasing. For amplification applications. The input signal at base is amplified and taken at the emitter. BC547 is used in common emitter configuration for amplifiers. The voltage divider is the commonly used biasing mode. For switching applications, transistor is biased so that it remains fully on if there is a signal at its base. In the absence of base signal, it gets completely off.

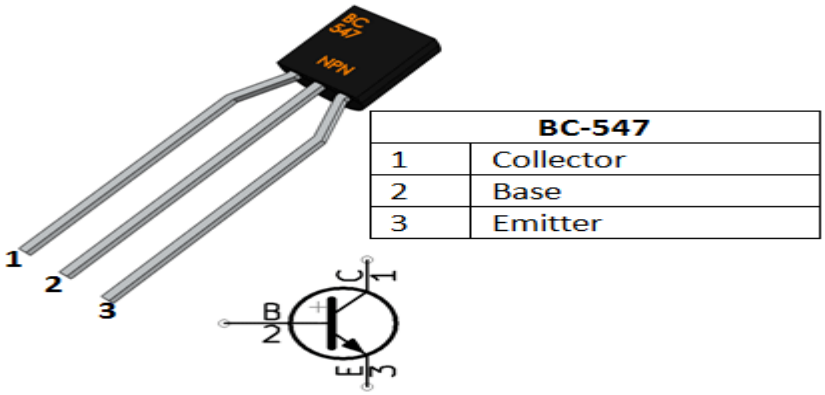

BC-547	
1	Collector
2	Base
3	Emitter

Figure 44:Bc547 pin diagram

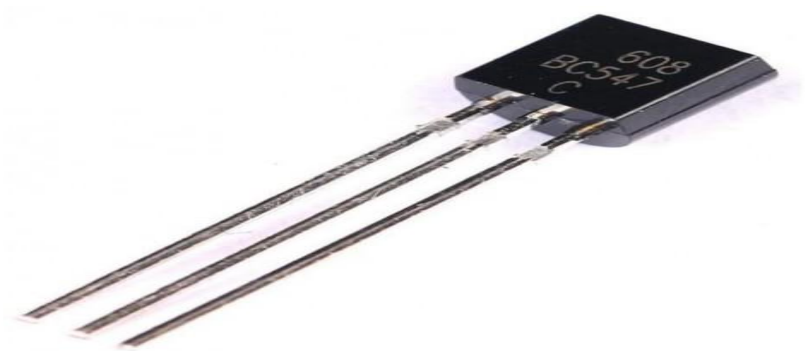

Figure 45: BC 547 CHIP

BC547 Transistor Features

- Bi-Polar NPN Transistor
- DC Current Gain (hFE) is 800 maximum
- Continuous Collector current (IC) is 100mA
- Emitter Base Voltage (VBE) is 6V
- Base Current(IB) is 5mA maximum
- Available in To-92 Package

Brief Description on BC547

BC547 is a NPN transistor hence the collector and emitter will be left open (Reverse biased) when the base pin is held at ground and will be closed (Forward biased) when a signal is provided to base pin. BC547 has a gain value of 110 to 800, this value determines the amplification capacity of the transistor. The maximum amount of current that could flow through the Collector pin is 100mA, hence we cannot connect loads that consume more than 100mA using this transistor. To bias a transistor we have to supply current to base pin, this current (I_B) should be limited to 5mA.

When this transistor is fully biased then it can allow a maximum of 100mA to flow across the collector and emitter. This stage is called **Saturation Region** and the typical voltage allowed across the Collector-Emitter (V_{CE}) or Base-Emitter (V_{BE}) could be 200 and 900 mV respectively. When base current is removed the transistor becomes fully off, this stage is called as the **Cut-off Region** and the Base Emitter voltage could be around 660 mV.

BC547 as Switch

When a transistor is used as a switch it is operated in the **Saturation and Cut-Off Region** as explained above. As discussed a transistor will act as an Open switch during Forward Bias and as a Closed switch during Reverse Bias, this biasing can be achieved by supplying the required amount of current to the base pin. As mentioned the biasing current should maximum of 5mA. Anything more than 5mA will kill the Transistor; hence a resistor is always added in series with base pin. The value of this resistor (R_B) can be calculated using below formulae.

$$\mathbf{R_B = V_{BE} / I_B}$$

Where, the value of V_{BE} should be 5V for BC547 and the Base current (I_B depends on the Collector current (I_C). The value of I_B should not exceed mA.

BC547 as Amplifier

A Transistors acts as an Amplifier when operating in **Active Region**. It can amplify power, voltage and current at different configurations.

Some of the configurations used in amplifier circuits are

1. Common emitter amplifier
2. Common collector amplifier
3. Common base amplifier

Of the above types common emitter type is the popular and mostly used configuration. When uses as an Amplifier the DC current gain of the Transistor can be calculated by using the below formulae

DC Current Gain = Collector Current (I_C) / Base Current (I_B)

Applications

- Driver Modules like Relay Driver, LED driver etc..
- Amplifier modules like Audio amplifiers, signal Amplifier etc..
- Darlington pair

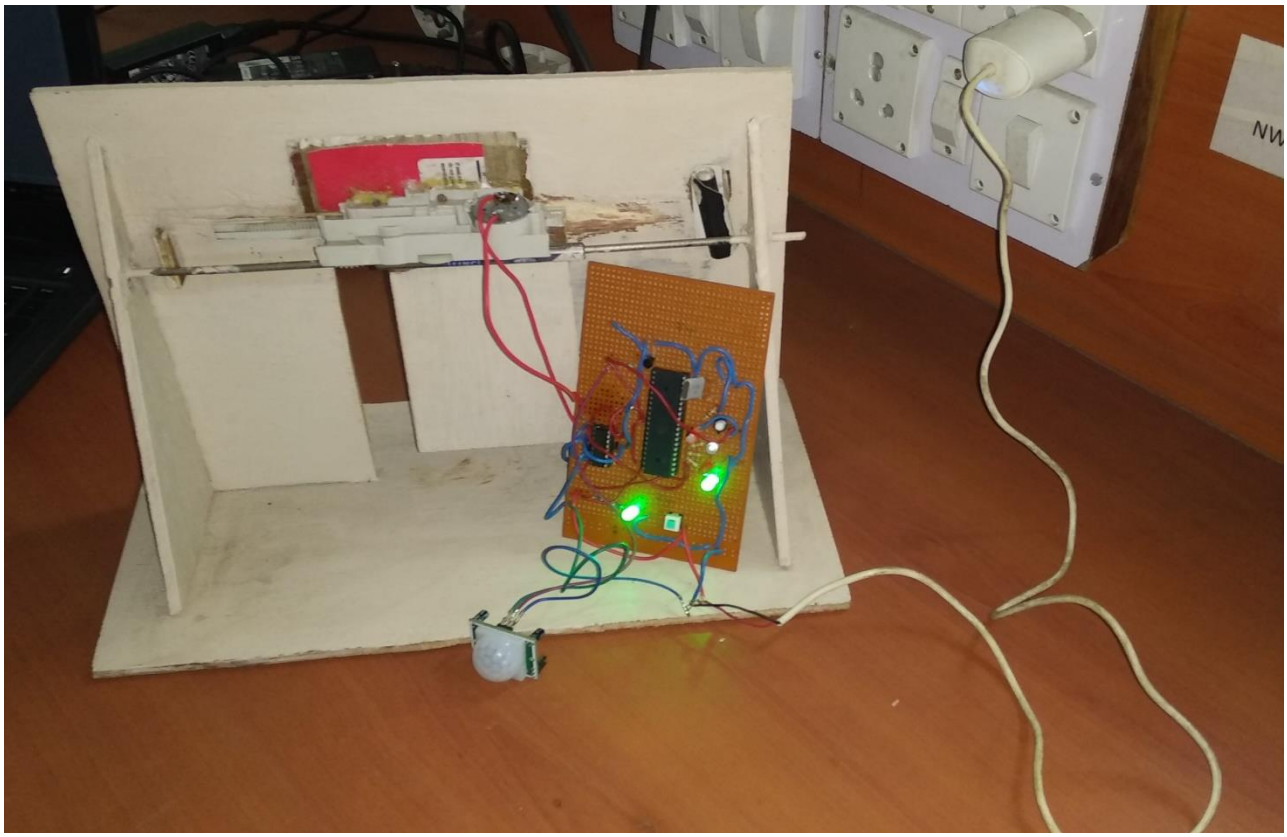

Figure 46: Hardware of Home Automation System

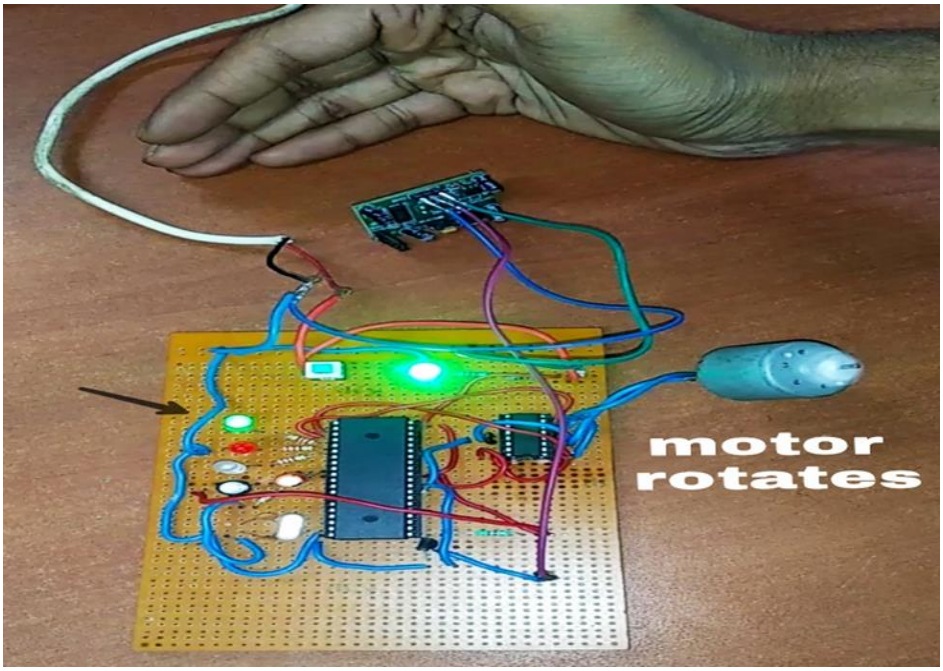

Figure 47:Circuit done in vero board

Creating Hex File Using Keil Microvision:

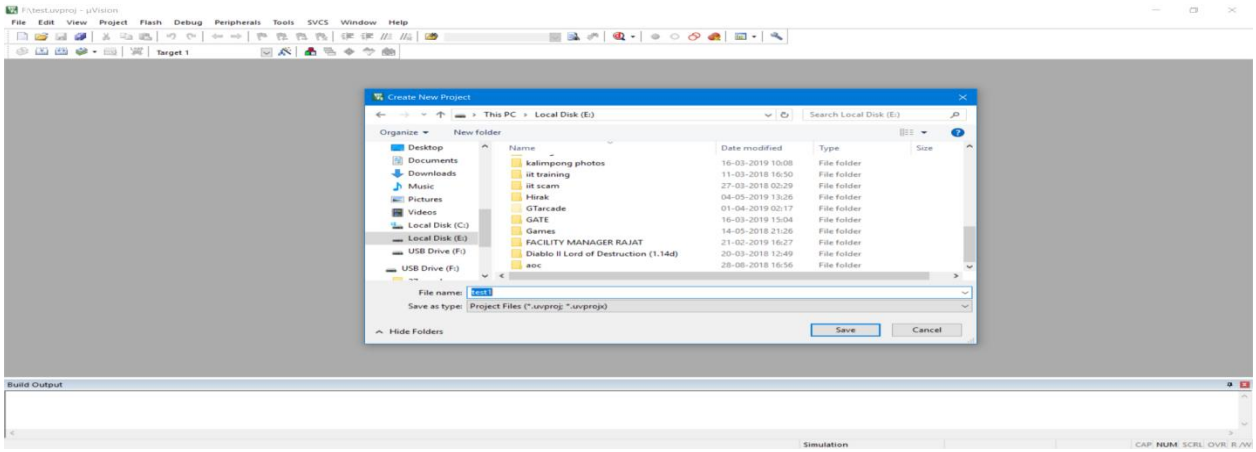

Figure 48:creating new microvision project

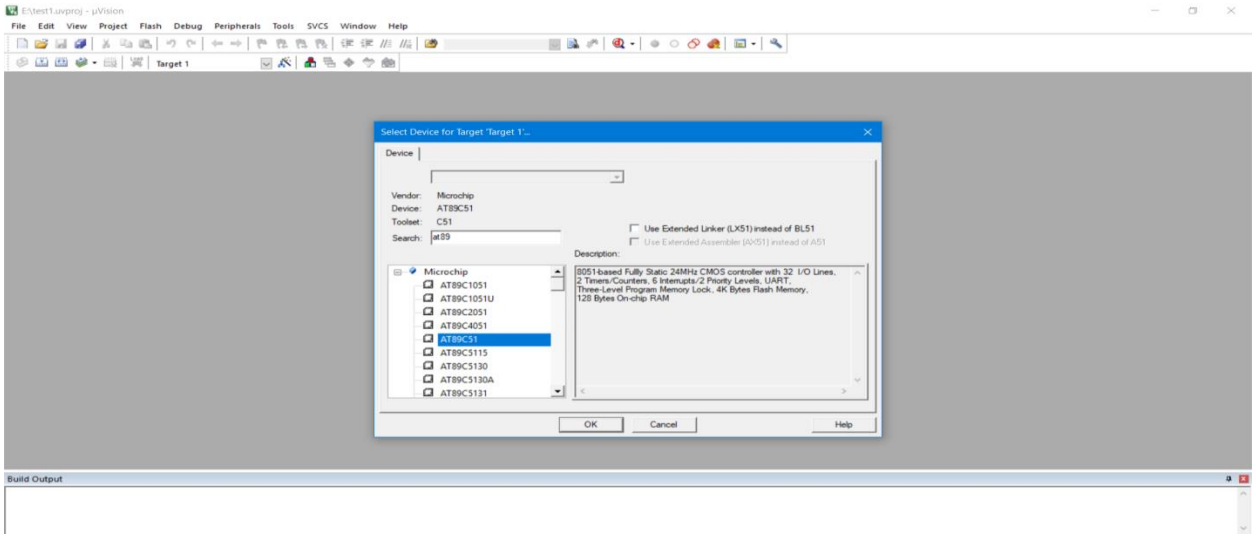

Figure 49:Selecting AT89C51 microcontroller

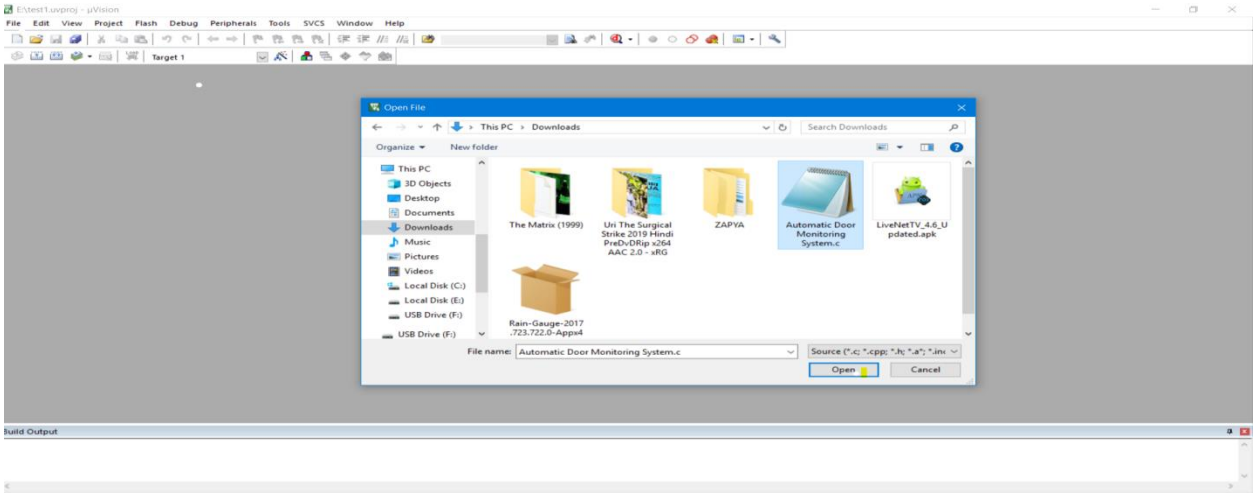

Figure 50:Selecting C file

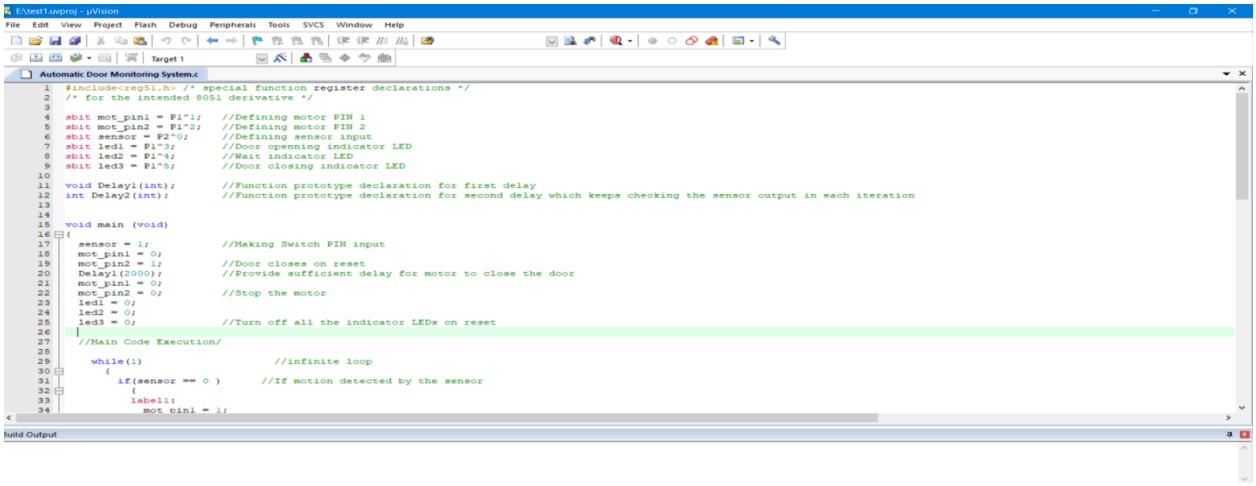

Figure 51:C code

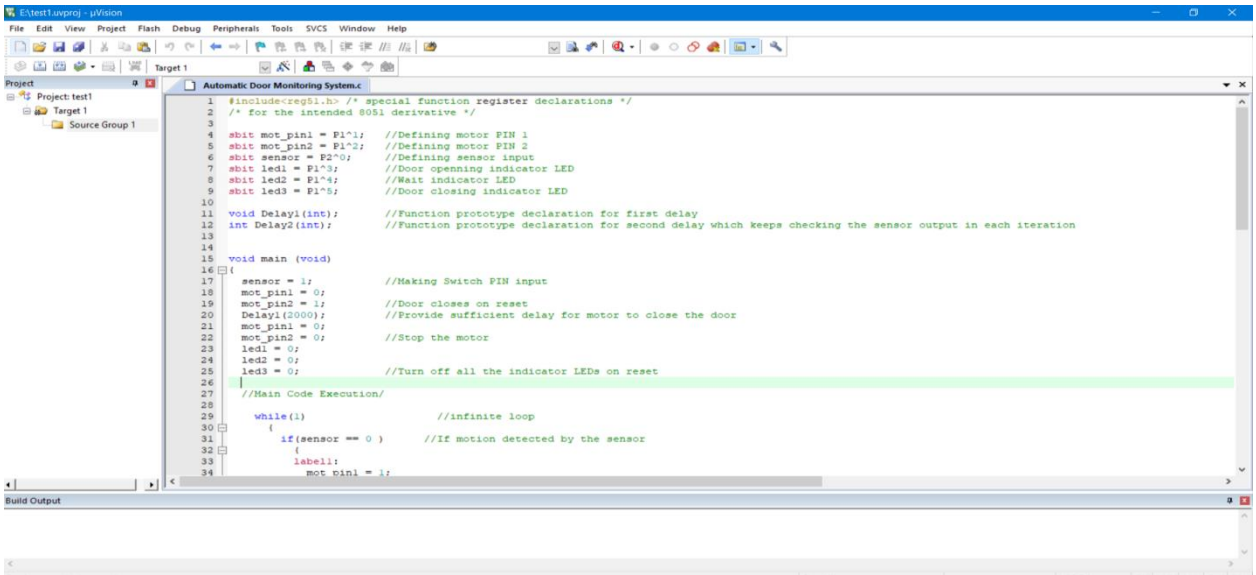

Figure 52:Selecing source group

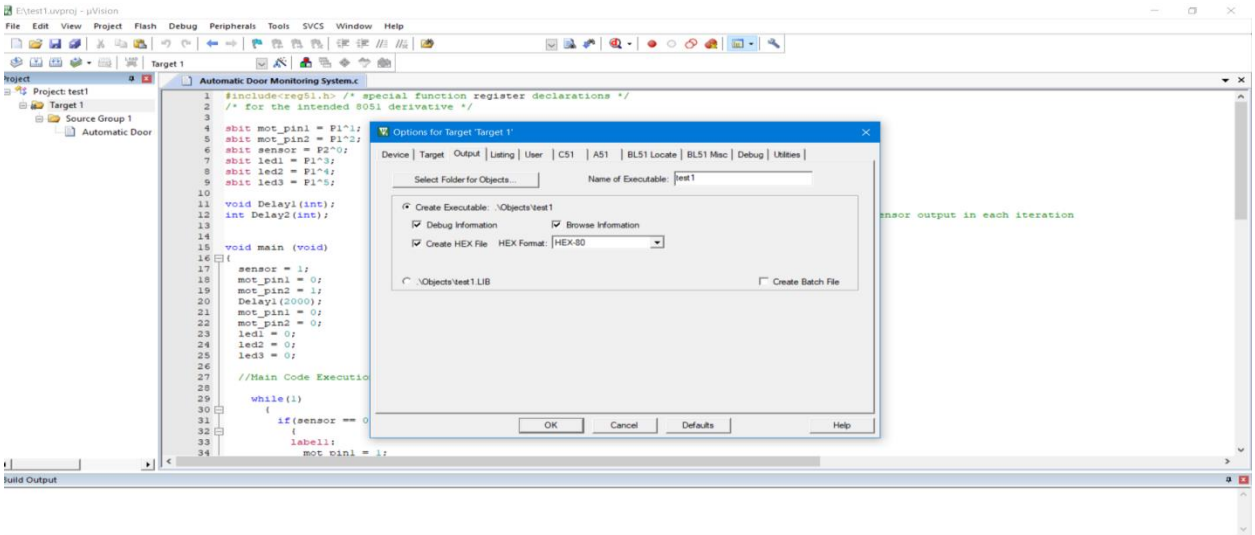

Figure 53:final step for creating hex file

Chapter 9

Application

Application Area for Proposed Scheme

1. Opening and closing of doors have been always a boring job, especially in places where a person is always required to open the door for visitors such as hotels, shopping malls and theatres. So it can be used in various rooms i.e. seminar hall, conference room.

2. For people in wheel chair and for disabled people, automatic doors are a necessity since conventional doors can be difficult to open for them.

3. Automatic doors can be used in warehouse and other facilities where people frequently have their hands full, contributing to safety and efficiency by making it easier for people to get around.

Chapter 10

Advantage and Disadvantage

Advantages

1. The future is automated. This smart system can be used in almost every places .From cinema halls to classrooms and restaurants where people need to get in and out several times. It saves the cost of maintaining a welcome boy for door service.

2. The door opening system has a fast response.

2. Can be used in conference hall, where the capacity of room is limited and should not be exceeded. It displays the actual number of persons inside the room.

Disadvantages

1. This system doesn't acknowledge the status of devices being operated.
2. This system cannot detect separate persons if more than one person attempts to enter simultaneously.

Chapter 11

Result

The project “Home Automation System” is designed to automate access for domestic and industrial applications. The system makes use of a microcontroller and a PIR sensor. The output from PIR sensor is fed as input to 8051C microcontroller. The Microcontroller will continuously monitor the output from PIR sensor and generates logic low or high. The output generated from PIR sensor is used to control the DC motor. The motor rotates when there is a change in surrounding infrared pattern.

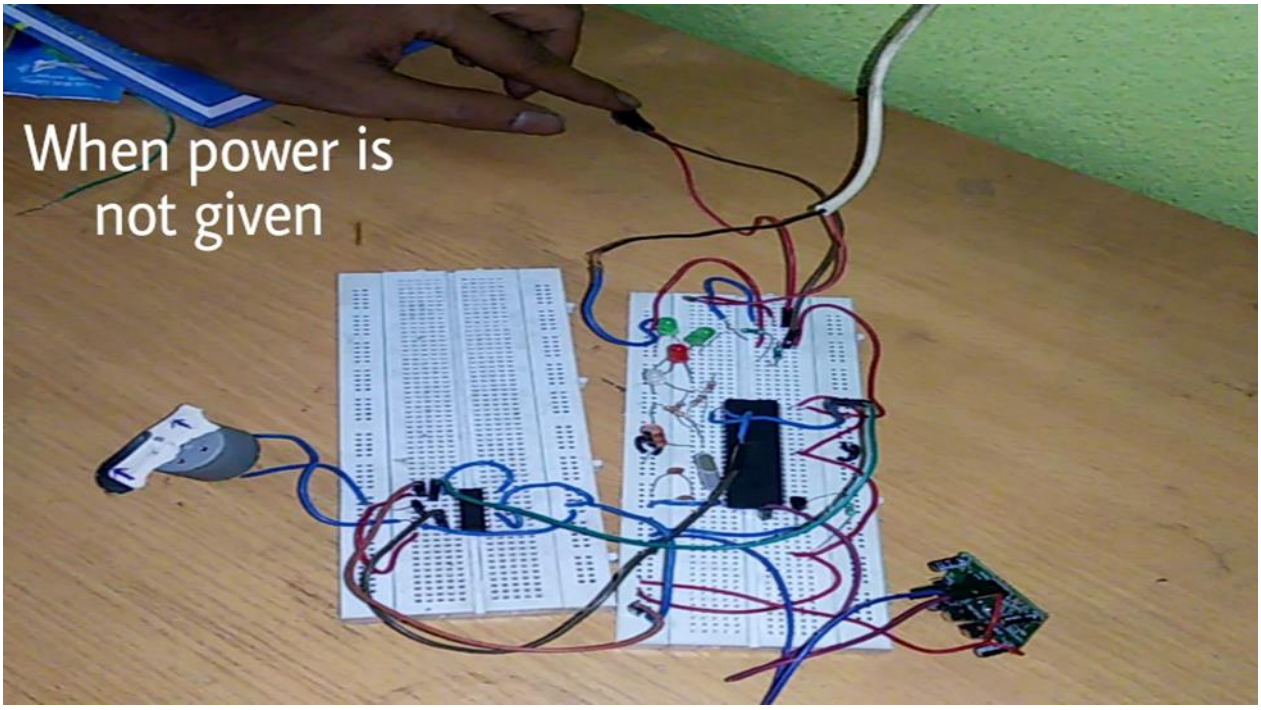

Figure 54: When power is not given in the circuit

Result

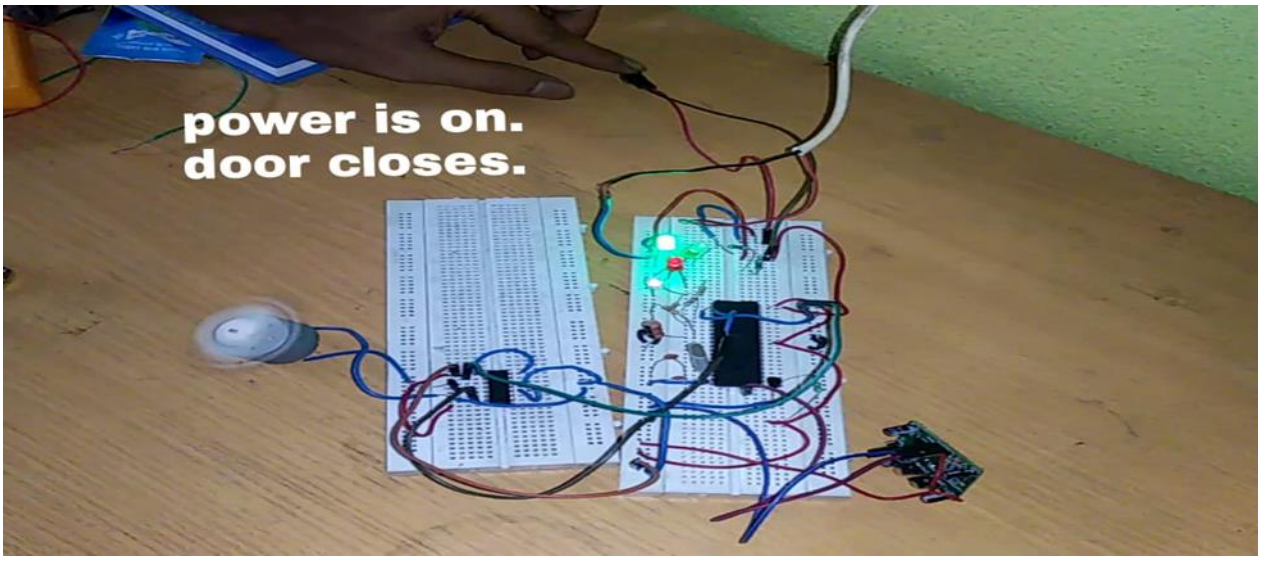

Figure 55: When Power is on-door closes

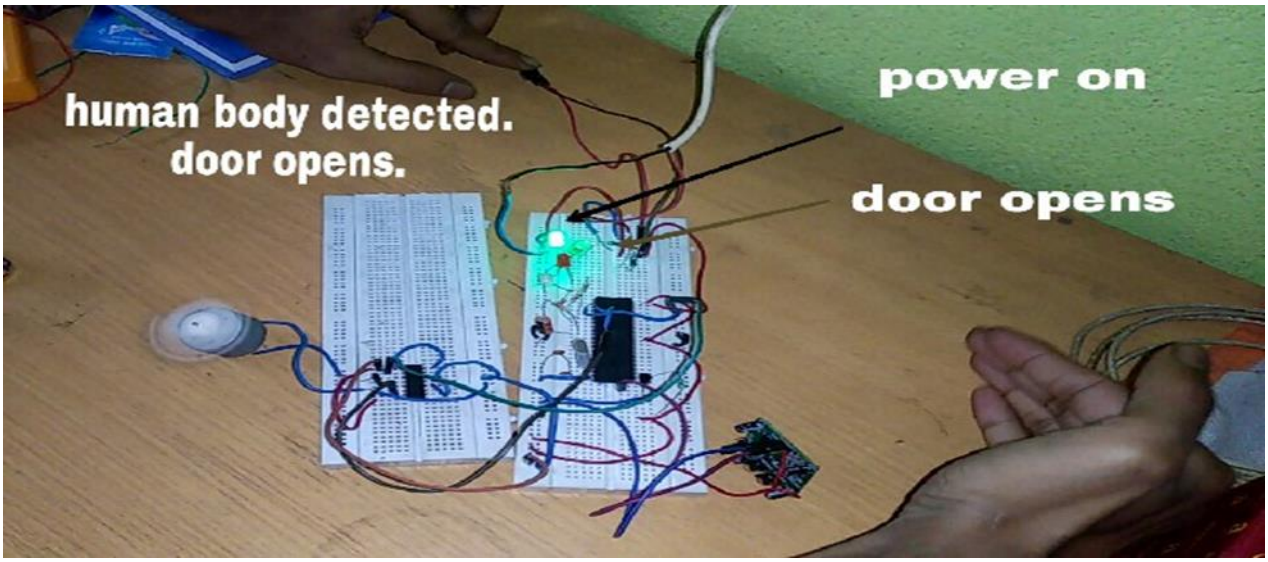

Figure 56: Human body is detected by PIR sensor

Result

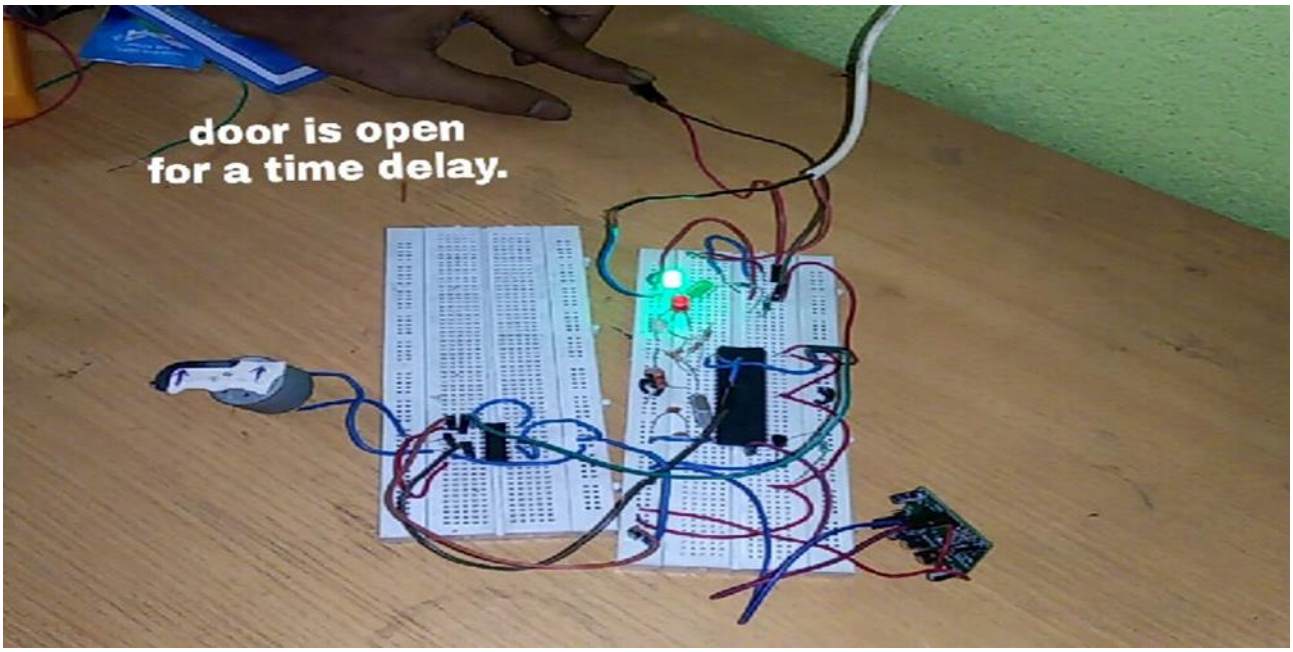

Figure 57: Delay time

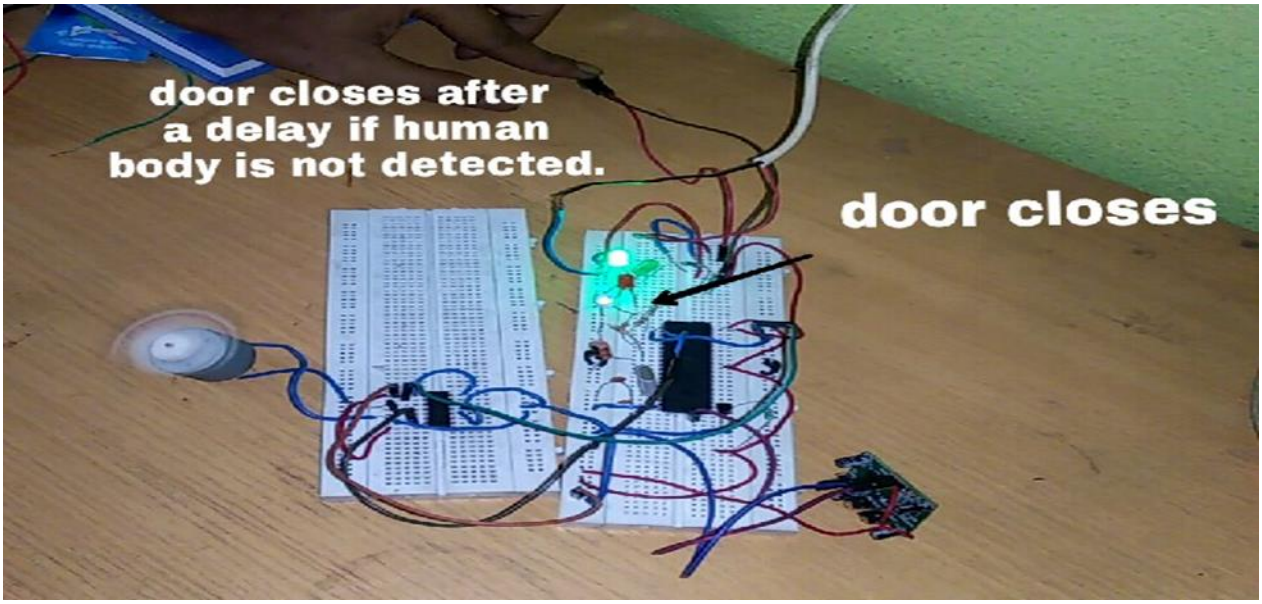

Figure 58: Door closes

Chapter 12

Conclusion

This project describes an easy model for automatic door opening system and visitor counter without human intervention. In the first part, using PIR sensor human body is detected which emits infrared rays, and thus there is a change in surrounding infrared region. Whenever the PIR detects, microcontroller sends control signal to motor to open the door. The door is closed after a time interval. Also at any time PIR senses again the door always open thus avoiding any accident.

Circuit is implemented in the Keil software converting the C program into hex code and implemented on the microcontroller. The performance has been verified both in software and hardware design. The total circuit is completely verified functionally and is following the application software. It can be concluded that the design implemented in the present work provide portability, flexibility, and the data transmission is also done with low power consumption.

Chapter 13

Future Scope of Study

1. The owner or user can simply turn off appliances using a smartphone when it is modified to switch off devices when no person is inside room.
2. At home, the owner can also maintain the room secured without needing to lock the door as the password detector will keep the room safe from unauthorised persons.
3. We can also send this data to a remote location using mobile or internet.
4. Voice alarm system can be added to indicate that room is full and persons can’t enter inside.

1.A Paul, M Panja, M Bagchi,N Das,R Mazumder,S Ghosh, “voice recognition based wireless room automation system”,2016 international conference on intelligent control power and instrumentation.

2.S Panchal,S Shinde,V Reddy,A Adeppa,”Automatic opening and closing of door” ,international journal of applied and pure science and agriculture.

3.Sligo Technology,”Human Sensed Automatic Door Opening and Closing System using PIR Sensor in GreenPak”.

4. D R Samuel,E Dickson,A B Aaron,"Design And Implimentation Of A Microcontoller Based Automatic Door And Visitors", International Journal Of Scientific Research And Education

5. I.Kaur (Asstt. Prof.) ,Rayat and Bahra Institute of Engineering and Bio-technology, Mohali, “Microcontroller Based Home Automation System With Security”, (IJACSA) International Journal of Advanced Computer Science and Applications, Vol. 1, No. 6, December 2010.

6. https://www.electronicshub.org/automatic-door-opening-system/#L293D_Motor_Driver

7. https://www.elprocus.com/automatic-door-opening-system-project-circuit/

8. https://www.edgefxkits.com/movement-sensed-automatic-door-opening-system

9. https://youtu.be/kgPCQu_cRH8

10. Garvin S L,Automatic door and window controls for the disabled,Building service journal,pp39-40.

```
#include<reg51.h> /* special function register declarations */

/* for the intended 8051 derivative */

sbit mot_pin1 = P1^1;    //Defining motor PIN 1

sbit mot_pin2 = P1^2;    //Defining motor PIN 2

sbit sensor = P2^0;            //Defining sensor input

sbit led1 = P1^3;      //Door openning indicator LED

sbit led2 = P1^4;      //Wait indicator LED

sbit led3 = P1^5;      //Door closing indicator LED


void Delay1(int);      //Function prototype declaration for first delay

int Delay2(int);        //Function prototype declaration for second delay which keeps checking the sensor
output in each iteration

void main (void)

{

                    sensor = 1;          //Making Switch PIN input

                    mot_pin1 = 0;

                    mot_pin2 = 1;        //Door closes on reset

                    Delay1(2000);        //Provide sufficient delay for motor to close the door

                    mot_pin1 = 0;

                    mot_pin2 = 0;        //Stop the motor

                    led1 = 0;

                    led2 = 0;

                    led3 = 0;            //Turn off all the indicator LEDs on reset

                    //Main Code Execution/


                         while(1)                                        //infinite loop
```

```
{
        if(sensor == 0 )            //If motion detected by the sensor
        {
        label1:
            mot_pin1 = 1;

            mot_pin2 = 0;       //Open the Door
            led1=1;led2=0;led3=0; //Indication by led 1


            Delay1(6000);       //Provide sufficient delay for
motor to open the door

        label2:
            mot_pin1 = 0;
            mot_pin2 = 0;       //Keep the door open for
few seconds
            led1=0;led2=1;led3=0; //Indication by led 2

            Delay2(2000);               //Check if sesnor
detects motion again

            if(Delay2() == 1)
                {
                    goto label2;    //If motion is
detected again, keep the door open for another few seconds
                }
```

```
                                                mot_pin1 = 0;

                                                mot_pin2 = 1;        //Close the Door
                                                led1=0;led2=0;led3=1; //Indication by led 3

                                                Delay2(3000);        //Check if sesnor detects
motion again when the door is closing

                                                if(Delay2() == 1)
                                                        {
                                                                goto label1;       //If motion is
detected again, start opening the door and repeat the sequence
                                                        }

                                                mot_pin1 = 0;

                                                mot_pin2 = 0;        //Keep the door closed
othwerwise
                                                led1=0;led2=0;led3=0; //Indication by turning
all led's OFF
                                        }
                                }
}
void Delay1(int k)
{
  int j;
  int i;
  for(i=0;i<k;i++)
```

```
                {
                        for(j=0;j<100;j++){}
                }
}
int Delay2(int k)
{
  int j;
  int i;
 for(i=0;i<k;i++)
                {
                        for(j=0;j<100;j++)
                                {
                                        if(sensor == 0)
                                                {
                                                        mot_pin1 = 0;
                                                        mot_pin2 = 0;
                                                        return 1;
                                                }
                                }
                }
}
```

8-Bit Microcontroller with 4K Bytes Flash

AT89C51

Features

- **Compatible with MCS-51™ Products**
- **4K Bytes of In-System Reprogrammable Flash Memory**
  - **Endurance: 1,000 Write/Erase Cycles**
- **Fully Static Operation: 0 Hz to 24 MHz**
- **Three-Level Program Memory Lock**
- **128 x 8-Bit Internal RAM**
- **32 Programmable I/O Lines**
- **Two 16-Bit Timer/Counters**
- **Six Interrupt Sources**
- **Programmable Serial Channel**
- **Low Power Idle and Power Down Modes**

Description

The AT89C51 is a low-power, high-performance CMOS 8-bit microcomputer with 4K bytes of Flash Programmable and Erasable Read Only Memory (PEROM). The device is manufactured using Atmel's high density nonvolatile memory technology and is compatible with the industry standard MCS-51™ instruction set and pinout. The on-chip Flash allows the program memory to be reprogrammed in-system or by a conventional nonvolatile memory programmer. By combining a versatile 8-bit CPU with Flash on a monolithic chip, the Atmel AT89C51 is a powerful microcomputer which provides a highly flexible and cost effective solution to many embedded control applications.

(continued)

Pin Configurations

PDIP

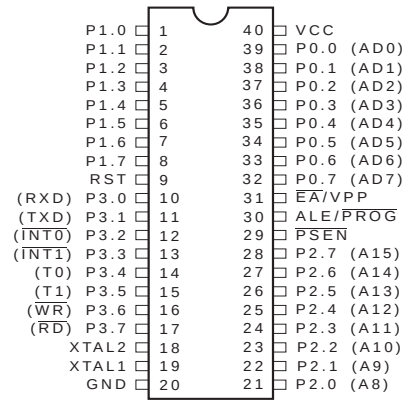

PQFP/TQFP

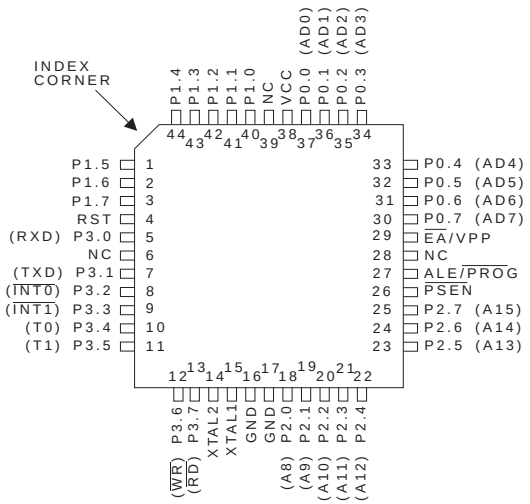

PLCC

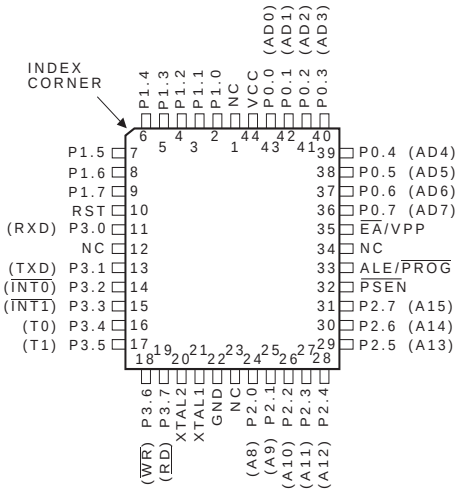

0265F-A–12/97

Block Diagram

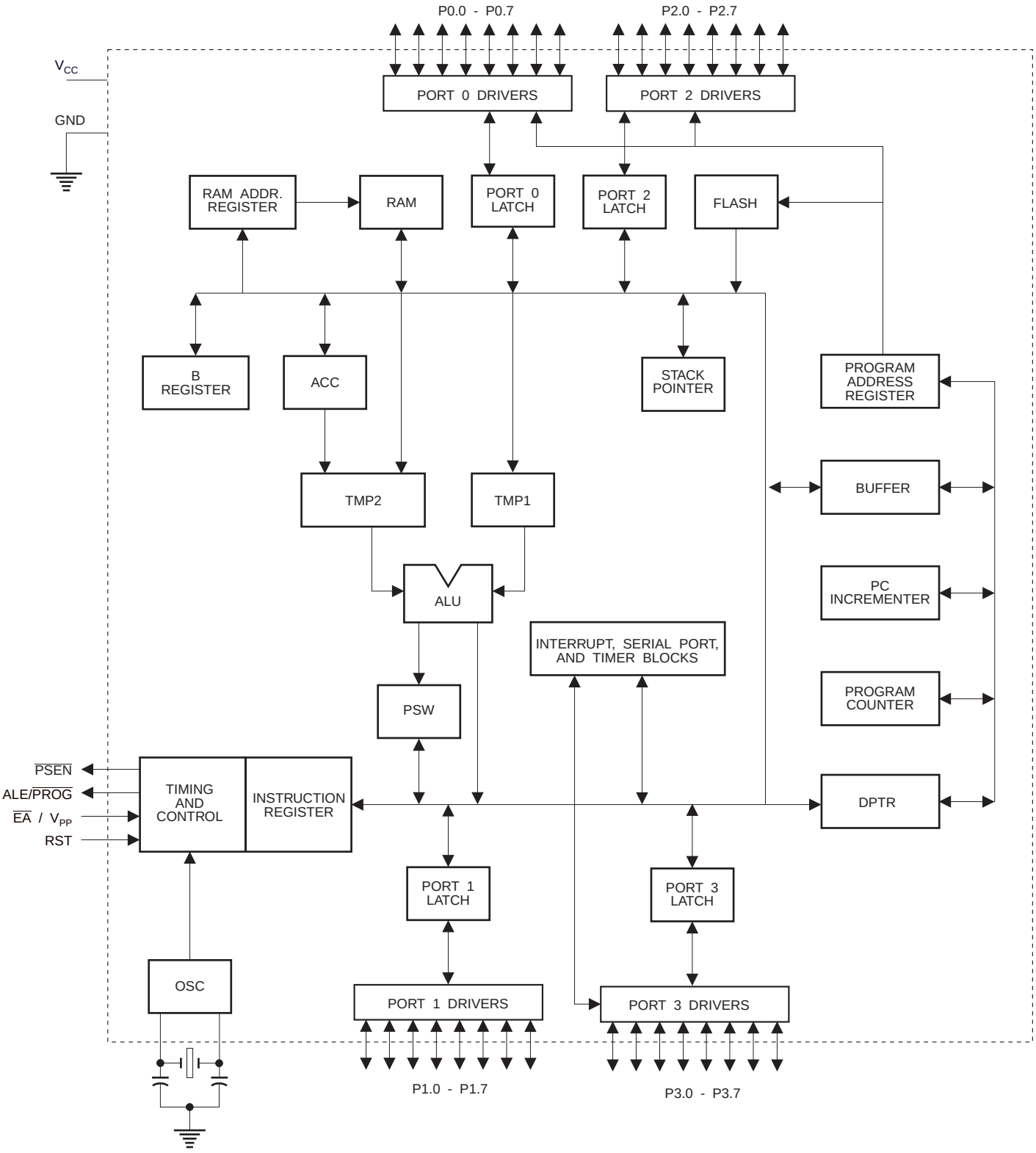

The AT89C51 provides the following standard features: 4K bytes of Flash, 128 bytes of RAM, 32 I/O lines, two 16-bit timer/counters, a five vector two-level interrupt architecture, a full duplex serial port, on-chip oscillator and clock circuitry. In addition, the AT89C51 is designed with static logic for operation down to zero frequency and supports two software selectable power saving modes. The Idle Mode stops the CPU while allowing the RAM, timer/counters, serial port and interrupt system to continue functioning. The Power Down Mode saves the RAM contents but freezes the oscillator disabling all other chip functions until the next hardware reset.

Pin Description

V_{CC}
Supply voltage.

GND
Ground.

Port 0
Port 0 is an 8-bit open drain bidirectional I/O port. As an output port each pin can sink eight TTL inputs. When 1s are written to port 0 pins, the pins can be used as high-impedance inputs.

Port 0 may also be configured to be the multiplexed low-order address/data bus during accesses to external program and data memory. In this mode P0 has internal pullups.

Port 0 also receives the code bytes during Flash programming, and outputs the code bytes during program verification. External pullups are required during program verification.

Port 1
Port 1 is an 8-bit bidirectional I/O port with internal pullups. The Port 1 output buffers can sink/source four TTL inputs. When 1s are written to Port 1 pins they are pulled high by the internal pullups and can be used as inputs. As inputs, Port 1 pins that are externally being pulled low will source current (I_{IL}) because of the internal pullups.

Port 1 also receives the low-order address bytes during Flash programming and verification.

Port 2
Port 2 is an 8-bit bidirectional I/O port with internal pullups. The Port 2 output buffers can sink/source four TTL inputs. When 1s are written to Port 2 pins they are pulled high by the internal pullups and can be used as inputs. As inputs, Port 2 pins that are externally being pulled low will source current (I_{IL}) because of the internal pullups.

Port 2 emits the high-order address byte during fetches from external program memory and during accesses to external data memory that use 16-bit addresses (MOVX @ DPTR). In this application it uses strong internal pullups when emitting 1s. During accesses to external data memory that use 8-bit addresses (MOVX @ RI), Port 2 emits the contents of the P2 Special Function Register.

Port 2 also receives the high-order address bits and some control signals during Flash programming and verification.

Port 3
Port 3 is an 8-bit bidirectional I/O port with internal pullups. The Port 3 output buffers can sink/source four TTL inputs. When 1s are written to Port 3 pins they are pulled high by the internal pullups and can be used as inputs. As inputs, Port 3 pins that are externally being pulled low will source current (I_{IL}) because of the pullups.

Port 3 also serves the functions of various special features of the AT89C51 as listed below:

Port Pin	Alternate Functions
P3.0	RXD (serial input port)
P3.1	TXD (serial output port)
P3.2	$\overline{INT0}$ (external interrupt 0)
P3.3	$\overline{INT1}$ (external interrupt 1)
P3.4	T0 (timer 0 external input)
P3.5	T1 (timer 1 external input)
P3.6	$\overline{WR}$ (external data memory write strobe)
P3.7	$\overline{RD}$ (external data memory read strobe)

Port 3 also receives some control signals for Flash programming and verification.

RST
Reset input. A high on this pin for two machine cycles while the oscillator is running resets the device.

ALE/$\overline{PROG}$
Address Latch Enable output pulse for latching the low byte of the address during accesses to external memory. This pin is also the program pulse input ($\overline{PROG}$) during Flash programming.

In normal operation ALE is emitted at a constant rate of 1/6 the oscillator frequency, and may be used for external timing or clocking purposes. Note, however, that one ALE pulse is skipped during each access to external Data Memory.

If desired, ALE operation can be disabled by setting bit 0 of SFR location 8EH. With the bit set, ALE is active only during a MOVX or MOVC instruction. Otherwise, the pin is weakly pulled high. Setting the ALE-disable bit has no effect if the microcontroller is in external execution mode.

$\overline{PSEN}$
Program Store Enable is the read strobe to external program memory.

When the AT89C51 is executing code from external program memory, $\overline{PSEN}$ is activated twice each machine cycle, except that two $\overline{PSEN}$ activations are skipped during each access to external data memory.

$\overline{EA}$/V_{PP}

External Access Enable. $\overline{EA}$ must be strapped to GND in order to enable the device to fetch code from external program memory locations starting at 0000H up to FFFFH. Note, however, that if lock bit 1 is programmed, $\overline{EA}$ will be internally latched on reset.

$\overline{EA}$ should be strapped to V_{CC} for internal program executions.

This pin also receives the 12-volt programming enable voltage (V_{PP}) during Flash programming, for parts that require 12-volt V_{PP}.

XTAL1

Input to the inverting oscillator amplifier and input to the internal clock operating circuit.

XTAL2

Output from the inverting oscillator amplifier.

Oscillator Characteristics

XTAL1 and XTAL2 are the input and output, respectively, of an inverting amplifier which can be configured for use as an on-chip oscillator, as shown in Figure 1. Either a quartz crystal or ceramic resonator may be used. To drive the device from an external clock source, XTAL2 should be left unconnected while XTAL1 is driven as shown in Figure 2. There are no requirements on the duty cycle of the external clock signal, since the input to the internal clocking circuitry is through a divide-by-two flip-flop, but minimum and maximum voltage high and low time specifications must be observed.

Idle Mode

In idle mode, the CPU puts itself to sleep while all the on-chip peripherals remain active. The mode is invoked by software. The content of the on-chip RAM and all the special functions registers remain unchanged during this mode. The idle mode can be terminated by any enabled interrupt or by a hardware reset.

It should be noted that when idle is terminated by a hard ware reset, the device normally resumes program execution, from where it left off, up to two machine cycles before the internal reset algorithm takes control. On-chip hardware inhibits access to internal RAM in this event, but access to the port pins is not inhibited. To eliminate the possibility of an unexpected write to a port pin when Idle is terminated by reset, the instruction following the one that invokes Idle should not be one that writes to a port pin or to external memory.

Figure 1. Oscillator Connections

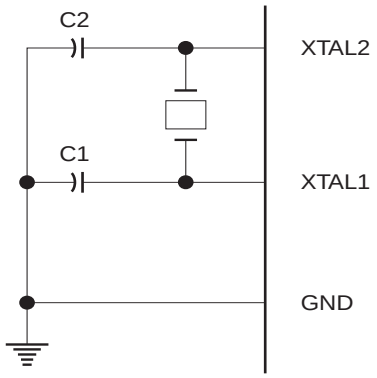

Note: C1, C2 = 30 pF ± 10 pF for Crystals
= 40 pF ± 10 pF for Ceramic Resonators

Figure 2. External Clock Drive Configuration

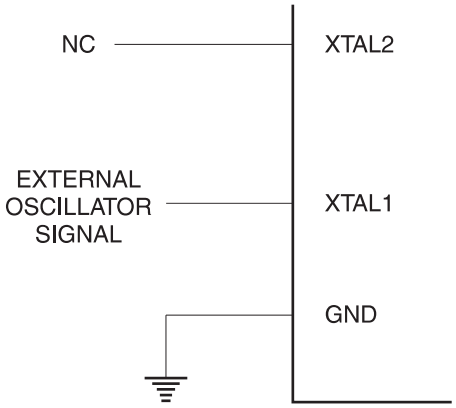

Status of External Pins During Idle and Power Down Modes

Mode	Program Memory	ALE	$\overline{PSEN}$	PORT0	PORT1	PORT2	PORT3
Idle	Internal	1	1	Data	Data	Data	Data
Idle	External	1	1	Float	Data	Address	Data
Power Down	Internal	0	0	Data	Data	Data	Data
Power Down	External	0	0	Float	Data	Data	Data

SGS-THOMSON MICROELECTRONICS

L293D
L293DD

PUSH-PULL FOUR CHANNEL DRIVER WITH DIODES

- 600mA OUTPUT CURRENT CAPABILITY PER CHANNEL
- 1.2A PEAK OUTPUT CURRENT (non repetitive) PER CHANNEL
- ENABLE FACILITY
- OVERTEMPERATURE PROTECTION
- LOGICAL "0" INPUT VOLTAGE UP TO 1.5 V (HIGH NOISE IMMUNITY)
- INTERNAL CLAMP DIODES

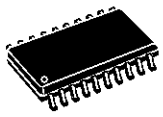

SO(12+4+4)

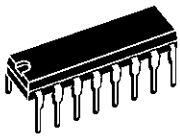

Powerdip (12+2+2)

ORDERING NUMBERS:

L293DD L293D

DESCRIPTION

The Device is a monolithic integrated high voltage, high current four channel driver designed to accept standard DTL or TTL logic levels and drive inductive loads (such as relays solenoides, DC and stepping motors) and switching power transistors.

To simplify use as two bridges each pair of channels is equipped with an enable input. A separate supply input is provided for the logic, allowing operation at a lower voltage and internal clamp diodes are included.

This device is suitable for use in switching applications at frequencies up to 5 kHz.

The L293D is assembled in a 16 lead plastic packaage which has 4 center pins connected together and used for heatsinking

The L293DD is assembled in a 20 lead surface mount which has 8 center pins connected together and used for heatsinking.

BLOCK DIAGRAM

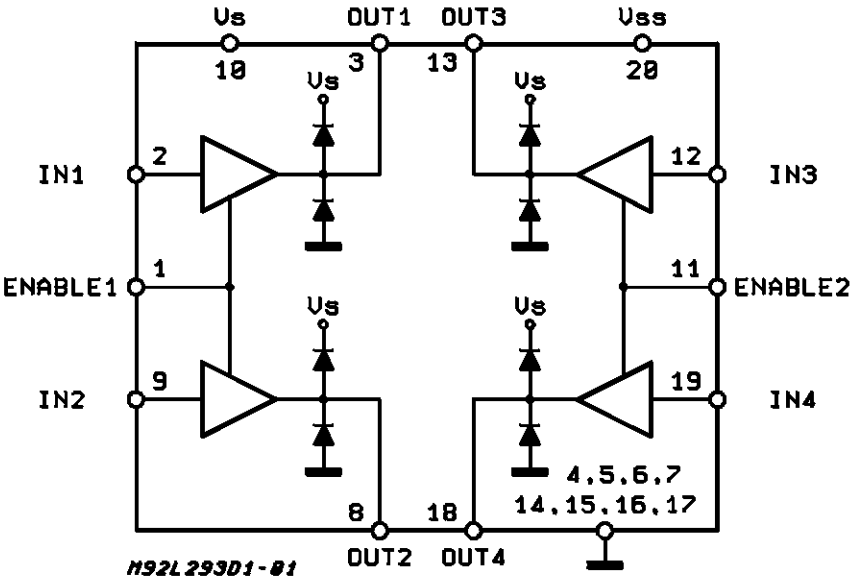

ABSOLUTE MAXIMUM RATINGS

Symbol	Parameter	Value	Unit
V_S	Supply Voltage	36	V
V_{SS}	Logic Supply Voltage	36	V
V_i	Input Voltage	7	V
V_{en}	Enable Voltage	7	V
I_o	Peak Output Current (100 µs non repetitive)	1.2	A
P_{tot}	Total Power Dissipation at T_{pins} = 90 °C	4	W
T_{stg}, T_j	Storage and Junction Temperature	– 40 to 150	°C

PIN CONNECTIONS (Top view)

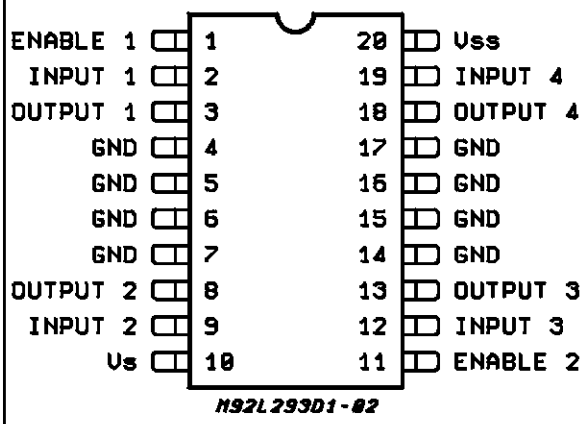

SO(12+4+4)

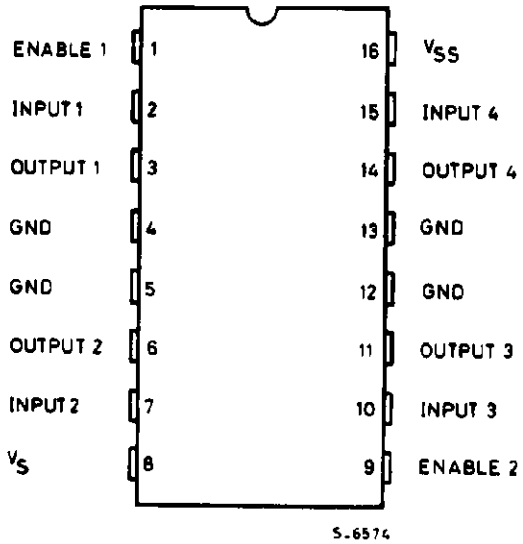

Powerdip(12+2+2)

THERMAL DATA

Symbol	Decription		DIP	SO	Unit
$R_{th\ j\text{-}pins}$	Thermal Resistance Junction-pins	max.	–	14	°C/W
$R_{th\ j\text{-}amb}$	Thermal Resistance junction-ambient	max.	80	50 (*)	°C/W
$R_{th\ j\text{-}case}$	Thermal Resistance Junction-case	max.	14	–	

(*) With 6sq. cm on board heatsink.

ELECTRICAL CHARACTERISTICS (for each channel, V_S = 24 V, V_{SS} = 5 V, T_{amb} = 25 °C, unless otherwise specified)

Symbol	Parameter	Test Conditions	Min.	Typ.	Max.	Unit
V_S	Supply Voltage (pin 10)		V_{SS}		36	V
V_{SS}	Logic Supply Voltage (pin 20)		4.5		36	V
I_S	Total Quiescent Supply Current (pin 10)	V_i = L ; I_O = 0 ; V_{en} = H		2	6	mA
		V_i = H ; I_O = 0 ; V_{en} = H		16	24	mA
		V_{en} = L			4	mA
I_{SS}	Total Quiescent Logic Supply Current (pin 20)	V_i = L ; I_O = 0 ; V_{en} = H		44	60	mA
		V_i = H ; I_O = 0 ; V_{en} = H		16	22	mA
		V_{en} = L		16	24	mA
V_{IL}	Input Low Voltage (pin 2, 9, 12, 19)		– 0.3		1.5	V
V_{IH}	Input High Voltage (pin 2, 9, 12, 19)	$V_{SS} \leq 7$ V	2.3		V_{SS}	V
		$V_{SS} > 7$ V	2.3		7	V
I_{IL}	Low Voltage Input Current (pin 2, 9, 12, 19)	V_{IL} = 1.5 V			– 10	µA
I_{IH}	High Voltage Input Current (pin 2, 9, 12, 19)	2.3 V $\leq V_{IH} \leq V_{SS}$ – 0.6 V		30	100	µA
$V_{en\,L}$	Enable Low Voltage (pin 1, 11)		– 0.3		1.5	V
$V_{en\,H}$	Enable High Voltage (pin 1, 11)	$V_{SS} \leq 7$ V	2.3		V_{SS}	V
		$V_{SS} > 7$ V	2.3		7	V
$I_{en\,L}$	Low Voltage Enable Current (pin 1, 11)	$V_{en\,L}$ = 1.5 V		– 30	– 100	µA
$I_{en\,H}$	High Voltage Enable Current (pin 1, 11)	2.3 V $\leq V_{en\,H} \leq V_{SS}$ – 0.6 V			± 10	µA
$V_{CE(sat)H}$	Source Output Saturation Voltage (pins 3, 8, 13, 18)	I_O = – 0.6 A		1.4	1.8	V
$V_{CE(sat)L}$	Sink Output Saturation Voltage (pins 3, 8, 13, 18)	I_O = + 0.6 A		1.2	1.8	V
V_F	Clamp Diode Forward Voltage	I_O = 600nA		1.3		V
t_r	Rise Time (*)	0.1 to 0.9 V_O		250		ns
t_f	Fall Time (*)	0.9 to 0.1 V_O		250		ns
t_{on}	Turn-on Delay (*)	0.5 V_i to 0.5 V_O		750		ns
t_{off}	Turn-off Delay (*)	0.5 V_i to 0.5 V_O		200		ns

(*) See fig. 1.

TRUTH TABLE (one channel)

Input	Enable (*)	Output
H	H	H
L	H	L
H	L	Z
L	L	Z

Z = High output impedance
(*) Relative to the considered channel

Figure 1: Switching Times

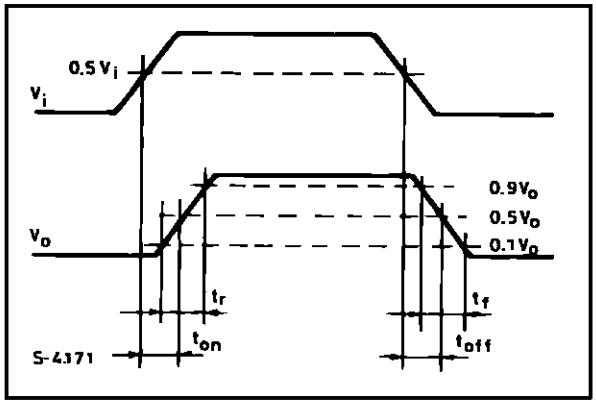

Figure 2: Junction to ambient thermal resistance vs. area on board heatsink (SO12+4+4 package)

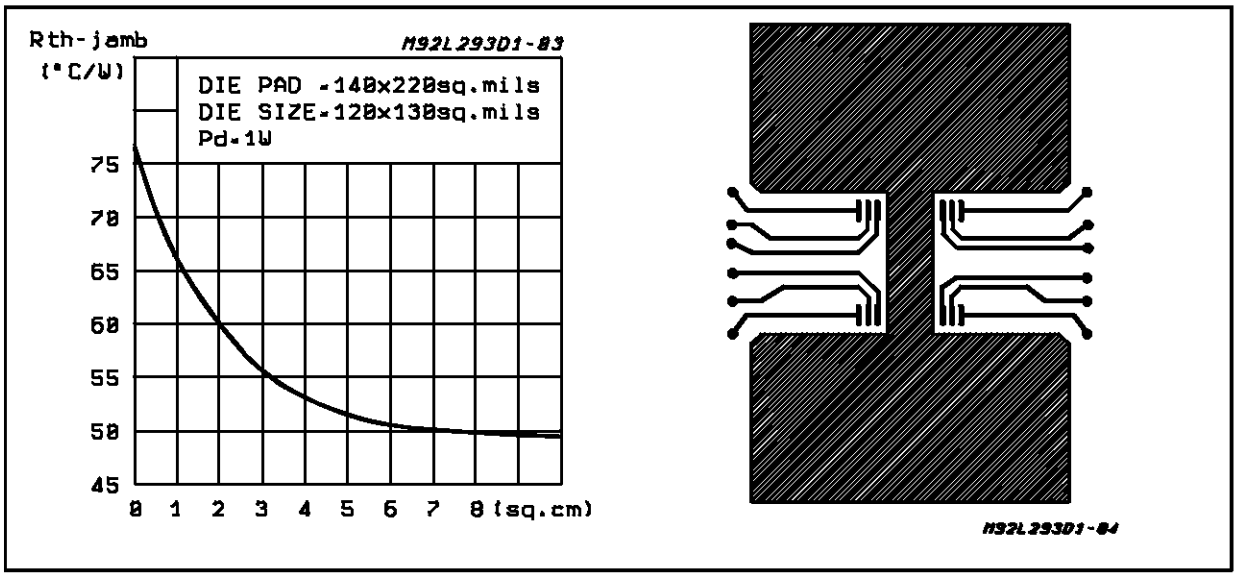

HC-SR501 PIR MOTION DETECTOR

Product Discription

HC-SR501 is based on infrared technology, automatic control module, using Germany imported LHI778 probe design, high sensitivity, high reliability, ultra-low-voltage operating mode, widely used in various auto-sensing electrical equipment, especially for battery-powered automatic controlled products.

Specification:

- Voltage: 5V – 20V
- Power Consumption: 65mA
- TTL output: 3.3V, 0V
- Delay time: Adjustable (.3->5min)
- Lock time: 0.2 sec
- Trigger methods: L – disable repeat trigger, H enable repeat trigger
- Sensing range: less than 120 degree, within 7 meters
- Temperature: – 15 ~ +70
- Dimension: 32*24 mm, distance between screw 28mm, M2, Lens dimension in diameter: 23mm

Application:

Automatically sensing light for Floor, bathroom, basement, porch, warehouse, Garage, etc, ventilator, alarm, etc.

Features:

- Automatic induction: to enter the sensing range of the output is high, the person leaves the sensing range of the automatic delay off high, output low.
- Photosensitive control (optional, not factory-set) can be set photosensitive control, day or light intensity without induction.
- Temperature compensation (optional, factory reset): In the summer when the ambient temperature rises to 30 ° C to 32 ° C, the detection distance is slightly shorter, temperature compensation can be used for performance compensation.
- Triggered in two ways: (jumper selectable)
  - non-repeatable trigger: the sensor output high, the delay time is over, the output is automatically changed from high level to low level;
  - repeatable trigger: the sensor output high, the delay period, if there is human activity in its sensing range, the output will always remain high until the people left after the delay will be high level goes low (sensor module detects a time delay period will be automatically extended every human activity, and the starting point for the delay time to the last event of the time).
- With induction blocking time (the default setting: 2.5s blocked time): sensor module after each sensor output (high into low), followed by a blockade set period of time, during this time period sensor does not accept any sensor signal. This feature can be achieved sensor output time “and” blocking time “interval between the work can be applied to interval detection products; This function can inhibit a variety of interference in the process of load switching. (This time can be set at zero seconds – a few tens of seconds).
- Wide operating voltage range: default voltage DC4.5V-20V.
- Micropower consumption: static current <50 microamps, particularly suitable for battery-powered automatic control products.
- Output high signal: easy to achieve docking with the various types of circuit.

Adjustment:

- Adjust the distance potentiometer clockwise rotation, increased sensing distance (about 7 meters), on the contrary, the sensing distance decreases (about 3 meters).
- Adjust the delay potentiometer clockwise rotation sensor the delay lengthened (300S), on the contrary, shorten the induction delay (5S).

Instructions for use:

- Sensor module is powered up after a minute, in this initialization time intervals during this module will output 0-3 times, a minute later enters the standby state.
- Should try to avoid the lights and other sources of interference close direct module surface of the lens, in order to avoid the introduction of interference signal malfunction; environment should avoid the wind flow, the wind will cause interference on the sensor.
- Sensor module with dual probe, the probe window is rectangular, dual (A B) in both ends of the longitudinal direction
  - so when the human body from left to right or right to left through the infrared spectrum to reach dual time, distance difference, the greater the difference, the more sensitive the sensor,
  - when the human body from the front to the probe or from top to bottom or from bottom to top on the direction traveled, double detects changes in the distance of less than infrared spectroscopy, no difference value the sensor insensitive or does not work;
- The dual direction of sensor should be installed parallel as far as possible in inline with human movement. In order to increase the sensor angle range, the module using a circular lens also makes the probe surrounded induction, but the left and right sides still up and down in both directions sensing range, sensitivity, still need to try to install the above requirements.

HC-SR501 PIR MOTION DETECTOR

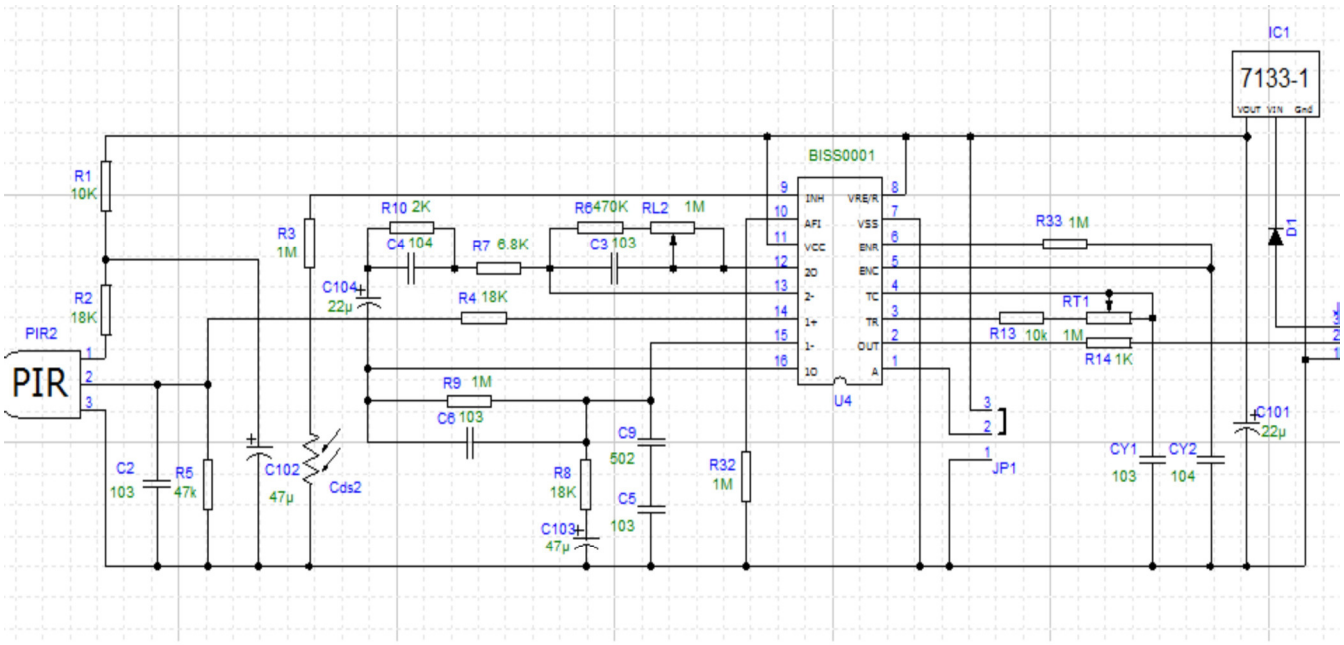

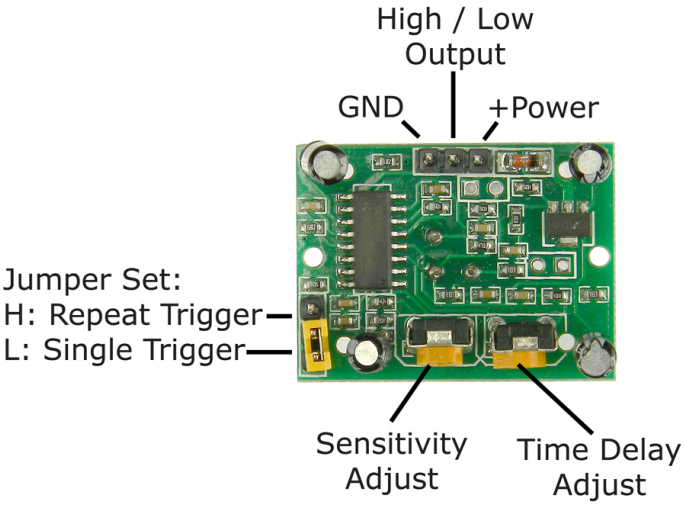

1 working voltage range :DC 4.5-20V

2 Quiescent Current :50uA

3 high output level 3.3 V / Low 0V

4. Trigger L trigger can not be repeated / H repeated trigger

5. circuit board dimensions :32 * 24 mm

6. maximum 110 ° angle sensor

7. 7 m maximum sensing distance

Product Type	HC--SR501 Body Sensor Module
Operating Voltage Range	5-20VDC
Quiescent Current	<50uA
Level output	High 3.3 V /Low 0V
Trigger	L can not be repeated trigger/H can be repeated trigger(Default repeated trigger)
Delay time	5-300S(adjustable) Range (approximately .3Sec -5Min)
Block time	2.5S(default)Can be made a range(0.xx to tens of seconds
Board Dimensions	32mm*24mm
Angle Sensor	<110 ° cone angle
Operation Temp.	-15-+70 degrees
Lens size sensor	Diameter:23mm(Default)

Application scope
•Security products
•Body induction toys
•Body induction lamps
•Industrial automation control etc
Pyroelectric infrared switch is a passive infrared switch which consists of BISS0001 ,pyroelectric infrared sensors and a few external components. It can au
open all kinds of equipments, inculding incandescent lamp, fluorescent lamp, intercom, automatic, electric fan, dryer and automatic washing machine, etc.
It is widely used in enterprises, hotels, stores, and corridor and other sensitive area for automatical lamplight, lighting and alarm system.

Instructions

Induction module needs a minute or so to initialize. During initializing time, it will output 0-3 times. One minute later it comes into standby.
Keep the surface of the lens from close lighting source and wind, which will introduce interference.
Induction module has double -probe whose window is rectangle. The two sub-probe (A and B) is located at the two ends of rectangle. When human body r
to right, or from right to left, Time for IR to reach to reach the two sub-probes differs.The lager the time diffference is, the more sensitive this module is. Wh
body moves face-to probe, or up to down, or down to up, there is no time difference. So it does not work. So instal the module in the direction in which mos
activities behaves, to guarantee the induction of human by dual sub-probes. In order to increase the induction range, this module uses round lens which ca
from all direction. However, induction from right or left is more sensitivity than from up or down.